TATA STEEL

TATA

Global Ports and Warehousing Standard

Tata Steel Europe Outbound Logistics

Tata Steel – Business Planning &Supply Chain	Revision 3.0
Outbound Logistics	Date : 12/05/2021Valid until 01/05/2023

Global Ports & Warehousing Standards

Table of Contents

Introduction	3
1.0 Health and Safety	9 - 10
2.0 Product Transit Standards	11 - 25
3.0 Product Handling Standards	26 – 48
4.0 Product Storage standards	49 - 66
5.0 Transhipment Facility Standards	67 – 68
6.0 Direct Dispatch Standards	69 – 73
7.0 Vessel Dispatch Standards	74 - 93
Appendix A: Tata Steel Cargo Damage Report	95 - 96
Appendix B: Repair – Report - Release (RRR) process & Repair – Report - Block (RRB) process	97 - 98

Global Ports & Warehousing Standards
Introduction

The use of external storage facilities have a direct bearing on the quality of the finished products delivered to our customers and the perception of Tata Steel. Therefore Tata Steel requires their partners to uphold the quality and presentation of their products.

This document aims to provide guidelines on receipt, handling, storage, inspection and dispatch of Tata Steel material from approved storage facilities. The standards have evolved over several years drawing on the experience of Tata Steel employees and our service partners.

Please be aware that the standards reflect our minimum expectation. We can always improve and we welcome your support in building on this guidance to achieve optimum product quality for our customers.

Global Ports & Warehousing Standards
Document Control

1. Publication

The Quality & Transport Safety Department (QTS) of Tata Steel Supply Chain Mainland Europe, Outbound is charged with the publication of the Tata Steel Europe (TSE) Global Ports & Warehousing Standards.

QTS will maintain a record of the publication of the controlled copies so that amendments can be made in all relevant departments.

The current version of the TSE Global Ports & Warehousing Standards will be available on a Tata Steel internet site anytime on the URL:
http://veiligheid.tatasteel.nl/en/Regulations/Transport-and-logistics/tata-ports-and-warehousing-standards.html

2. Validity

The document remains valid up to and including the date mentioned in the footer of this document, but can be amended when necessary.

3. Archive

Records of the TSE Global Ports & Warehousing Standards will be archived for at least 3 years.

4. Authorisation

QTS will present any amendments to the Manager Quality & Transport Safety for authorization before sharing this document with all Logistics Service Providers (LSP's) in the TSE logistical network.

Global Ports & Warehousing Standards
Contact page

IJmuiden Office:

Paul Venneker

Manager Quality & Transport Safety

TSE Supply Chain Outbound QTS

Tata Steel Europe

T: +31 (0)251 498257

M: +31 (0)6 12601013

E: Paul.Venneker@tatasteeleurope.com

UK Office:

Huw Davies

Logistics Quality & Safety Compliance Manager

TSE Supply Chain Outbound QTS

Tata Steel Europe

T: +44 (0)1633 755027

M: +44 (0)7900 164466

E: huw.j.davies@tatasteeleurope.com

USA Office:

Kevin Tyszkiewicz

Logistics & Operations Manager NAFTA

TSE Supply Chain Outbound TSIA

Tata Steel Group

T: N/A

M: +1 847 376 9720

E: Kevin.Tyszkiewicz@tatasteeleurope.com

Global Ports & Warehousing Standards
Change List

Terminated

Product Receiving Standards - Hot rolled coils(2.3)

Product Receiving Standards - Unwrapped & Wrapped CR Coils (2.4)

Global Ports & Warehousing Standards
Change List

Changed

Product Handling Standards, General Handling Guidelines - Extra information added for weather sensitive material (3.1)

Handling Equipment Suitability Matrix – Included requirement for sling protection for cold rolled material that does not have inner/outer protection rings (3.2).

Product Handling Standards Use of Cranes & FLTs: Palletised Coils – Extra information added including application of anti-slip matting when using a platform (3.5)

(Storage) requirements for Full Finish material – Extra information added (was 4.9, now 4.10)

Palletised Coils Storage (ETTS) – Requirements for min and max spacing between coils in a single row (was 4.13, now 4.15)

Delivery to Vessel – Requirement to report wet products to Tata Steel (7.2)

Stowing Cargo: Coil – Requirement for use of ISPM-15 and reference to size of wedges to be used (7.4)

Global Ports & Warehousing Standards
Change List

New

Banding of Coils (Non-Spring Back) (2.3)

Cold Rolled Coils – Product Type/Handling Labels (2.4)

Ovalisation of Coils(2.5)

Product Handling Standards, General Handling Guidelines - Stacking of products during handling (3.1)

Storage requirements for Top Stowage material (4.10)

Storage requirements for Geverfd Product / Organic coated strip material (4.11)

Delivery to Vessel - Dunnage (7.3)

Stowage requirements for Full Finish material (7.6)

Storage requirements for Top Stowage material (7.7)

Stowage requirements for Geverfd Product / Organic coated strip material (7.8)

1.0 HEALTH AND SAFETY

1.1 Health and Safety
Overview

The safety and health of all the people who work in and with the Tata Steel Group is our number one priority. We strive for zero harm not just on our own sites but across all of our logistics supply chains. The role and support of our service providers is key to achieving this.

Tata Steel Europe has a number of safety guidance documents and safety standards for all logistics and steel related activities. Please contact your local Tata Steel representative for any support.

We are committed to working with you to achieve excellence in health and safety

ZERO HARM

2.0 PRODUCT TRANSIT STANDARDS

2.1 Product Receiving Standards

Visual Inspection

All material must be visually inspected against the receipt standards and **TSE** inspection criteria document

Any material that fails to comply with the criteria in the receipt standards must be quarantined

On receipt, all material must be checked to ensure they contain at least one Tata Steel Odette label:

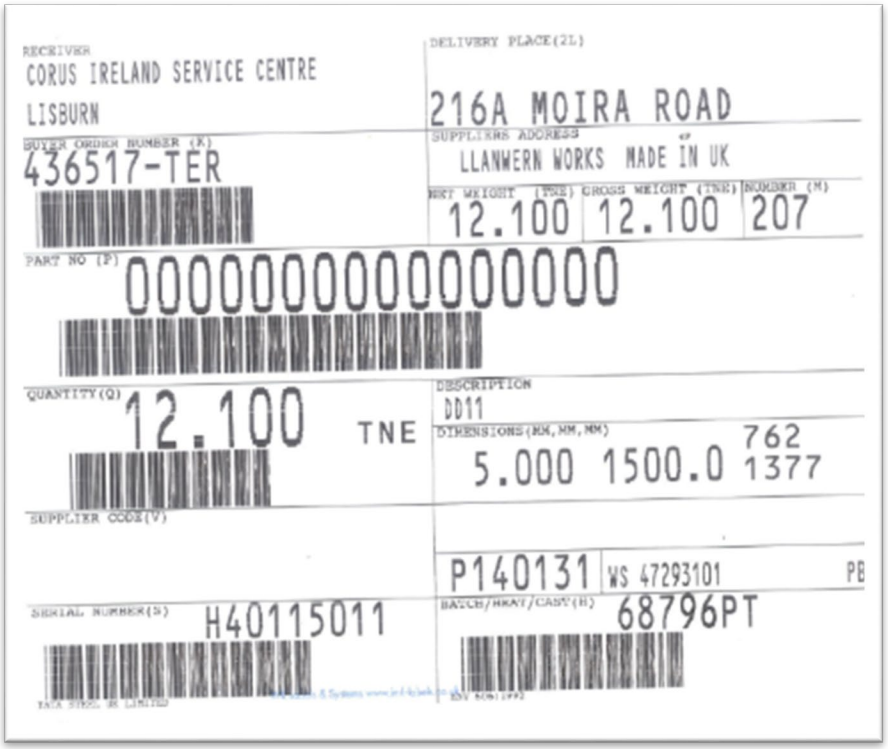

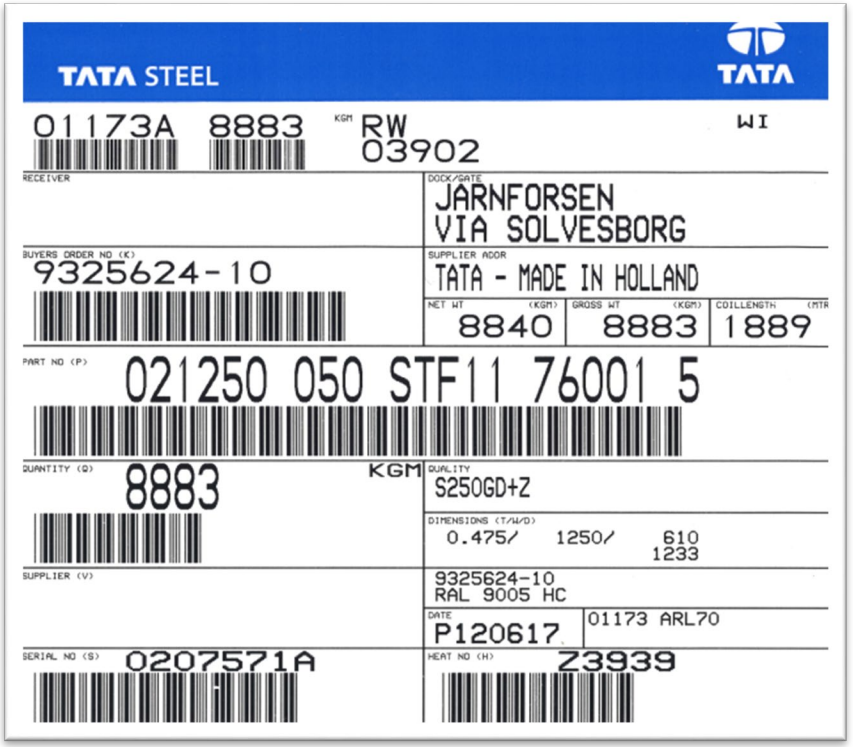

2.2 Product Receiving Standards
Spring Back Coils – Hot Rolled

Spring Back Coils

All spring back coils are labelled: SPRING BACK.

1 X

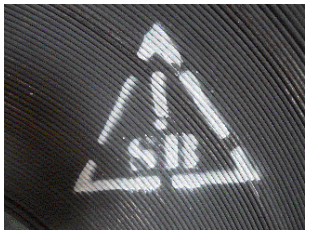

2 X

Material is highly tensioned, care must be taken when handling this material. Information on Springback coils is available at http://veiligheid.tatasteel.nl/en/Regulations/General-regulations/spring-back.html which is also accessible via QR-code or URL included on the sticker!

Depending upon the production line, some of the labels show the number of required bands required for the coil

In the example right the 4H indicates that the coil must have 4 radial bands and the 8B that the coil must have 8 circumferential bands applied.

Any coils with less than the required bands must have the missing bands replaced Please check with your Tata Steel contact for the correct band strength.

2.2 Product Receiving Standards
Spring Back Coils – Hot Rolled

Spring Back Coils

> During handling operations, do not stand directly in line with the coiling direction of the coil .

- Coils must be placed on the end flap at all times when straps are removed/applied - Do not allow coil to roll.
- If banding is removed manually, the outer bands should be cut last and from a position that does not place the operator directly in front of the coil.

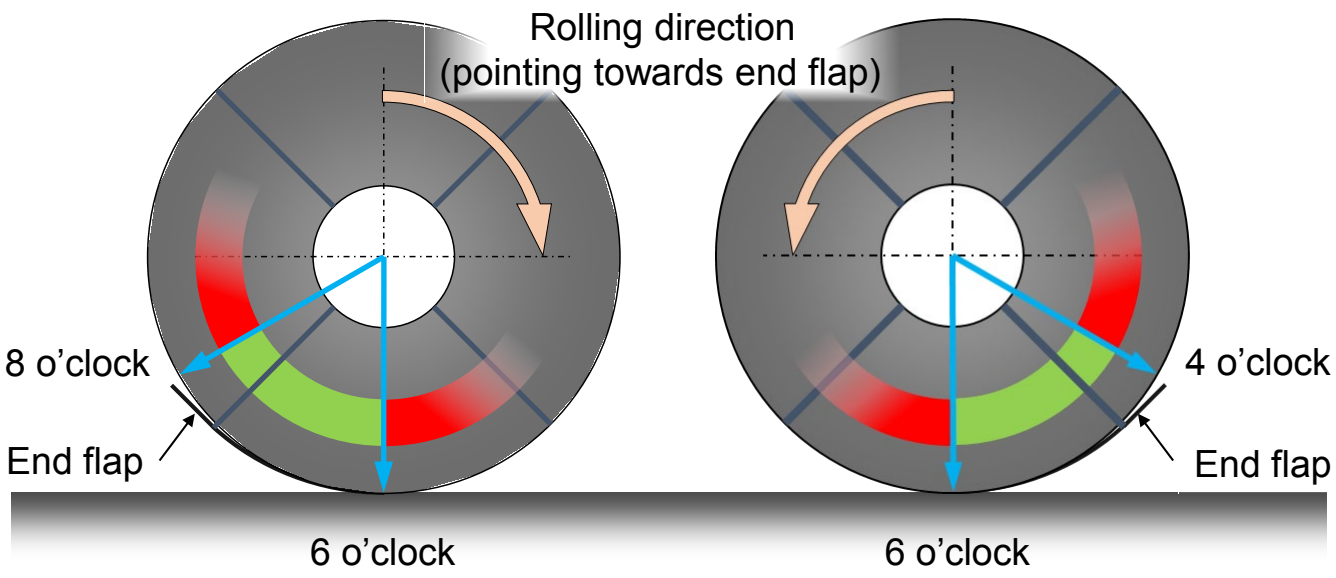

2.2 Product Receiving Standards
Spring Back Coils – Cold Rolled

Spring Back Coils

During handling operations, do not stand directly in line with the coiling direction of the coil .

- Before the coil is unpacked, it must be positioned on the coil tail. Do not allow coil to roll.
- If banding is removed manually, the outer bands should be cut last and from a position that does not place the operator directly in front of the coil.

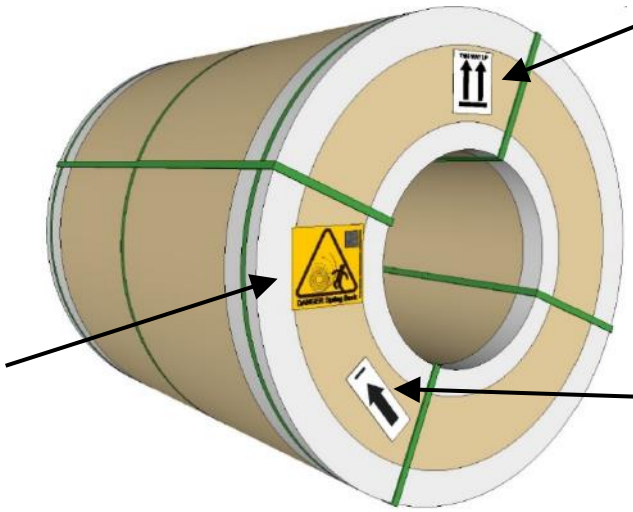

Fully packaged coil with 'Spring Back', 'This way up' and 'Winding Direction' labels

2.3 Product Receiving Standards
Banding of Coils (Non Springback)

When it has been observed that a band is broken or has come off a coil then this band must be replaced. This replacement band must be of a certain strength depending upon the coil. The strengths quoted below are including the joint. These strengths are: -

14 kN for packed material

and

23.5 kN for unpacked material.

If different strapping is used then a calculation must be done to determine the number of straps needed to secure the coil, for example one strap with a breaking strength of 14 kN can be replaced by 2 straps with a breaking strength of 7 kN or 3 of 5kN.

Always use strapping joints that are rated to at least 70% of the tensile strength of the band.

Check with your Tata Steel contact as necessary.

2.4 Product Receiving Standards

Cold Rolled Coils – Product Type / Handling Labels

Some coils have special handling stickers applied. These stickers identify coils have special storage and/or stowage requirements in order to maintain their shape and/or quality. Each type of sticker has different set of handling requirements. The table below shows an overview of these requirements. For the information is available is Sections 4.9 thru 4.11 and 7.6 thru 7.8.

Product type	Full Finish	Top Stowage	Geverfd Product / Organic coated strip
Handing operation			
In vessel Single level / top stowage only?	Single level / top stowage only.	Single level / top stowage only	Single level / top stowage only
In vessel. Use in key coil combination?	No, cannot be use in key coil combination	Yes, can be use in key coil combination	Yes, can be use in key coil combination
In warehouse. Single level / top stacking only?	Single level / top stowage only.	May be stacked. See relevant section - 4.8	Single level / top stowage only.

2.5 Product Receiving Standards
Ovalisation of Coils

Ovalisation wrapped coils

Any ovalised coil with a bore difference (height vs width) of >30 mm (1.2 inch) must be quarantined and communicated to the agreed Tata Steel quality contact as soon as possible

Any ovalised material must be single stacked, quarantined (see Section 4.14) and put on hold in the local stock management system.

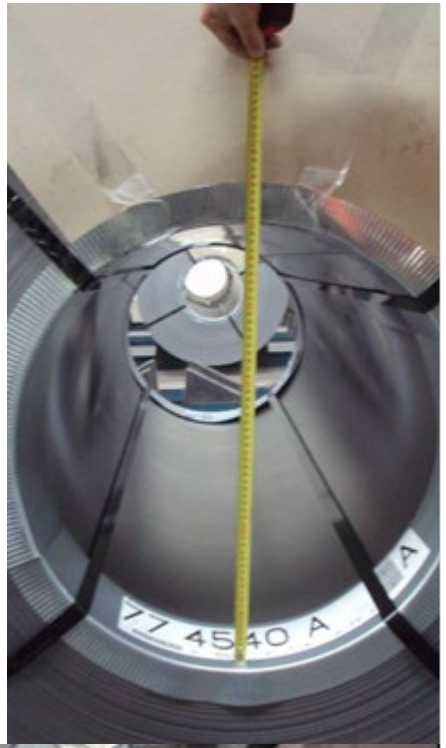

Ovalisation unwrapped

Any ovalised coil with a bore difference (height vs width) of >20mm (0.8 inch) must be quarantined and communicated to the agreed Tata Steel quality contact as soon as possible

Note

Tata Steel produces coils with a number of different diameters.

2.6 Product Receiving Standards

Packed coils, palletised coils and tinplate bundles

All packaged material should be free of rips and tears. Packaging damage must be repaired using waterproof tape.

Any material showing packaging damage must be photographed and the packaging repaired within 24 hours of damage being noted. The information must be passed across to the appropriate Tata Steel quality contact as soon as possible.

In line with the Tata Steel quality control R-R-R(3R) or R-R-B(2RB) process (see appendix) any coil with actual product damage must be quarantined, photographed and communicated to the agreed Tata Steel quality contact within 24 working hours. The material will be assessed and appropriate action directed.

2.7 Product Receiving Standards
Slab

All slabs upon receipt in the supply chain must have at least one ID clearly legible on the material.

Any export slab movements may require additional labelling. If in any doubt over the suitability of material, please contact the Tata Steel quality contact.

Any slab that cannot be identified must be quarantined and the Tata Steel quality contact immediately notified.

2.8 Product Receiving Standards
Sheet

All sheet packs must have at least one label attached

Material should be banded to the level agreed in the facility SLA.

There should be no sign of damage to the material

Any material with no label must be quarantined and the Tata Steel quality contact immediately notified.

Any bands missing at the point of receipt must be replaced

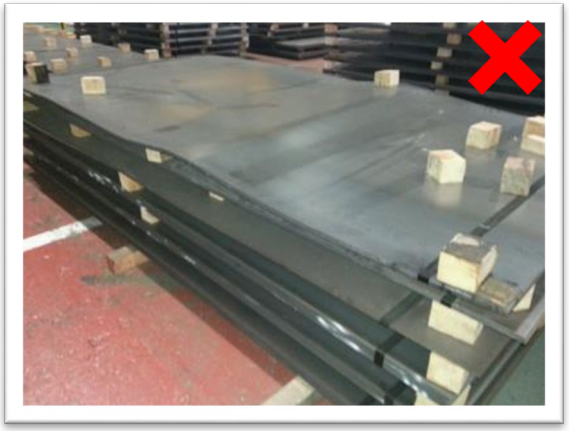

2.9 Product Receiving Standards
Pallet Coils (ETTS)

Material Condition

There should be no signs of damage to the steel.

The coil packaging must be fully intact with no exposed steel.

Any coils showing evidence of damage or non-conformance from the outlined receipt standard must be quarantined and highlighted to your Tata Steel quality contact as soon as possible

The coil diameter determines the skid type. The skid used in relation to the coil diameter differs depending on the source of the coil. If necessary the combination of coil diameter / pallet size can be checked against the table below. The measured coil diameter (minus the an allowance for the edge protection if measured across the top of the coil) must be used to determine if the coil is mounted on the correct plastic skid.

Skid type	Coil diameter IJmuiden	Coil diameter Trostre
A	941 mm - 1016 mm	940 mm - 1016 mm
B	1017 mm - 1130 mm	1017 mm - 1139 mm
C	1131 mm - 1270 mm	1140 mm - 1279 mm
D	1271 mm - 1420 mm	1280 mm - 1429 mm
E	1421 mm - 1592 mm	1430 mm - 1579 mm
F	1593 mm - 1700 mm	1580 mm - 1761 mm

2.9 Product Receiving Standards
Pallet Coils (ETTS)

Material Condition

Palletised coils must be securely attached to the pallet. There should be no signs of movement from original storage position on pallet

The band around the base of the pallet must be intact. Any broken bands must be replaced before handling.

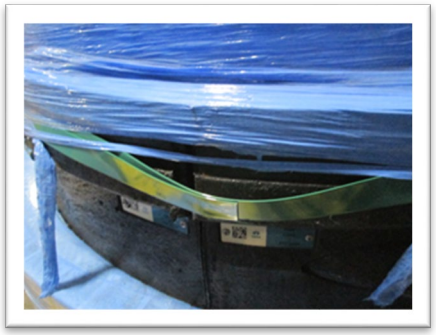

If the banding looks as if it is loose than the band should be checked as best as possible to ensure that it still forms a ring around the whole of the pallet and is not broken.

Pallet locking pins/lugs must be engaged to ensure the slope of the pin/lug in the pallet is not visible. If the slope of the pin is visible, quarantine the coil and inform your Tata Steel representative for further instructions.

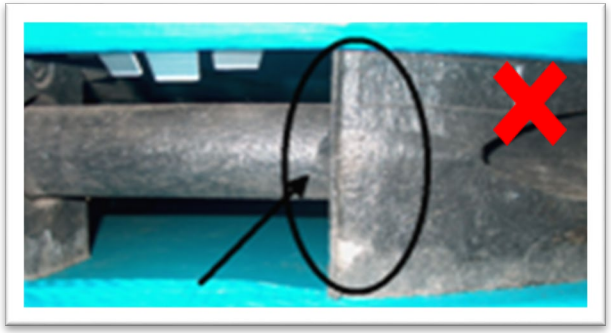

2.10 Product Receiving Standards
Tinplate Sheet Packs

Material Condition

Must be stacked on to vertically aligned dunnage

Must be fully packed and undamaged

Must be labelled on the outside. Sheet Packs ID labels are split into two. The photograph below shows the label and the position of the pack ID number that should be used in communication with Tata Steel

Any material showing evidence of damage or none conformance from the outlined receipt standard should be quarantined and highlighted to your Tata Steel quality contact within 24 working hours (see Appendix)

2.11 Product Receiving Standards
Documentation

The observations based on visual inspection **must be recorded**, either electronically in the supplier warehouse system or via a manual method (DCR = Damage Cargo Report) and on the Proof of Delivery / CMR documentation where applicable.

All damages must be recorded, regardless of severity upon receipt on the delivery-/shipping document.

If in doubt contact your Tata Steel quality contact.

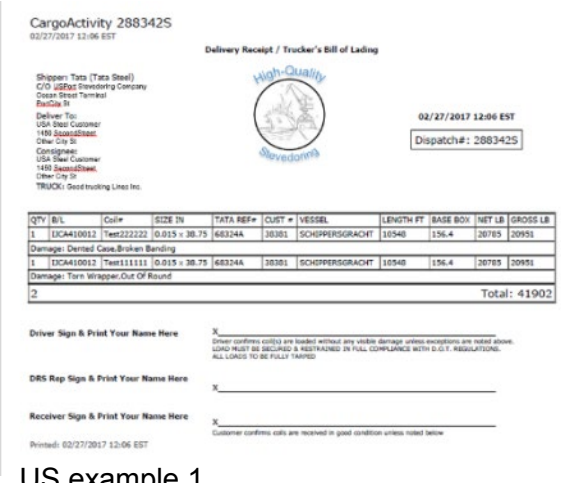

CargoActivity 288342S
02/27/2017 12:06 EST

Delivery Receipt / Trucker's Bill of Lading

Shipper: Tata (Tata Steel)
C/O USPort Stevedoring Company
Ocean Steel Terminal
FexCity St

Deliver To:
USA Steel Customer
1450 SecondSteel
Other City St

Consignee:
USA Steel Customer
1450 SecondSteel
Other City St

TRUCK: Good trucking Lines Inc.

High-Quality Stevedoring

02/27/2017 12:06 EST

Dispatch#: 2883425

QTY	B/L	Coil#	SIZE IN	TATA REF#	CUST #	VESSEL	LENGTH FT	BASE BOX	NET LB	GROSS LB
1	DCA410012	Test222222	0.015 x 38.75	68324A	38381	SCHIPPERSGRACHT	10548	156.4	20785	20951
Damage: Dented Case,Broken Banding										
1	DCA410012	Test111111	0.015 x 38.75	68324A	38381	SCHIPPERSGRACHT	10548	156.4	20785	20951
Damage: Torn Wrapper,Out Of Round										
2										Total: 41902

Driver Sign & Print Your Name Here
X_____
Driver confirms coil(s) are loaded without any visible damage unless exceptions are noted above.
LOAD MUST BE SECURED & RESTRAINED IN FULL COMPLIANCE WITH D.O.T. REGULATIONS.
ALL LOADS TO BE FULLY TARPED

DRS Rep Sign & Print Your Name Here
X_____

Receiver Sign & Print Your Name Here
X_____
Customer confirms coils are received in good condition unless noted below

Printed: 02/27/2017 12:06 EST

US example 1

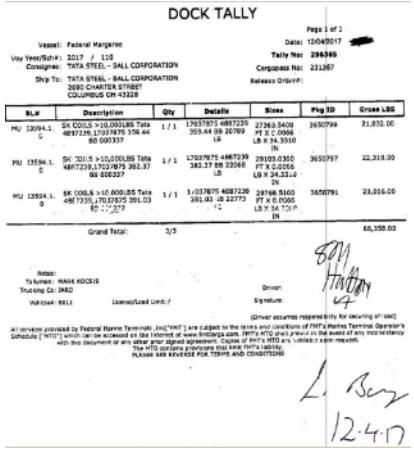

DOCK TALLY

Page 1 of 1
Date: 12/04/2017 [redacted]
Tally No: 296369
Cargopass No: 231287
Release Order#:

Vessel: Federal Margaree
Voy Year/Sch#: 2017 / 110
Consignee: TATA STEEL - BALL CORPORATION
Ship To: TATA STEEL - BALL CORPORATION
2690 CHARTER STREET
COLUMBUS OH 43228

B/L#	Description	Qty	Details	Sizes	Pkg ID	Gross LBS
MU 13094.1.0	SK COILS >10,000LBS Tata 4887239,17037875 359.44 88 26789 80 000337 LB	1 / 1	17037875 4887239 359.44 88 26789 LB	27363.5400 FT X 0.0066 LB X 34.3310 IN	3650799	21,832.00
MU 13594.1.0	SK COILS >10,000LBS Tata 4887239,17037875 382.37 88 22068 80 000337 LB	1 / 1	17037875 4887239 382.37 88 22068 LB	29103.0300 FT X 0.0066 LB X 34.3310 IN	3650797	22,310.00
MU 13594.1.0	SK COILS >10,000LBS Tata 4887239,17037875 391.03 88 22773 80 000337 LB	1 / 1	1/037875 4887239 391.03 88 22773 LB	29768.5160 FT X 0.0066 LB X 34.3310 IN	3650791	23,016.00
	Grand Total:	3/3				66,158.00

Notes:
Tsymnee: MANE KOCSIS
Trucking Co: JMAD
Vehicle: BELL
License/Load Limit: /
Driver:
Signature:
(Driver assumes responsibility for securing of load)

All services provided by Federal Marine Terminals, Inc("FMT") are subject to the terms and conditions of FMT's Marine Terminal Operator's Schedule ("MTO") which can be accessed on the Internet at www.fmtbarge.com. FMT's MTO shall prevail in the event of any inconsistency with this document or any other prior signed agreement. Copies of FMT's MTO are available upon request.
The MTO contains provisions that limit FMT's liability.
PLEASE SEE REVERSE FOR TERMS AND CONDITIONS

12-4-17

US example 2

Any damages exceeding the tolerances outlined in this document should result in the material being quarantined and the appropriate Tata Steel quality contact (as outlined in the SLA) informed to discuss how to action material (see Appendix)

3.0 PRODUCT HANDLING STANDARDS

3.1 Product Handling Standards
General Handling Guidelines

All cargo must be treated as weather unless informed otherwise by Tata Steel.

Weather sensitive means that the material must not be exposed to rain, snow high concentrations of dust etc.

Material that is not weather sensitive is classed as ‘Non-Weather Sensitive’.

- Weather sensitive Cargo should be not be handled in rain, landing areas must be kept free from pools of water
- Loading/Unloading activities of vessels (individual holds) and vehicles that contain any weather sensitive material must be stopped during rain/snow etc. This is valid even if the product being (un)loaded at that time is non-weather sensitive.
- Facilities must be available to protect weather sensitive material during unloading activities, should it begin to rain/snow etc.
- All material regardless of if it is weather sensitive or not must be protected from salt (sea) water.

Further information regarding Wet Weather Working is available in section 7.2 Delivery to vessel.

3.1 Product Handling Standards
General Handling Guidelines

Tata Steel products must not be rolled or pushed.

Tata Steel products must be handled with appropriate handling equipment as described in this section.

All operations should be designed to keep handling to a minimum.

Suitable and safe handling equipment must:

- meet all applicable certifications
- be well maintained; maintenance logged in a maintenance register
- not cause damage to products
- only be operated by competent and trained personnel (training schedule must be available)
- be operated within the equipment's stated safe working load specifications

Any damage caused during handling or found in stock must be reported to Tata Steel within 1 working day after the damage is caused or found (see Appendix A, Tata Steel Damage Cargo Report).

3.1 Product Handling Standards
General Handling Guidelines

- It is strictly forbidden to stack products during handling operations unless specifically mentioned in the Tata Steel Europe, Ports and Warehousing Standards (GP&WS)
- This includes but is not restricted to handling by Crane (whether by slings, platform or any other method), Forklift truck or Reach stacker etc.
- The stacking of other materials on top of Tata Steel products is also forbidden.

3.1 Product Handling Standards

General Handling Guidelines

Maximum of coils to be lifted at the same time is two(double lift)

Double lift is only allowed when the two coils to be lifted are making contact **before** the lift begins **and** the difference in the diameters is less than 300 mm (1 foot)

Dragging the coils together using the crane is not allowed.

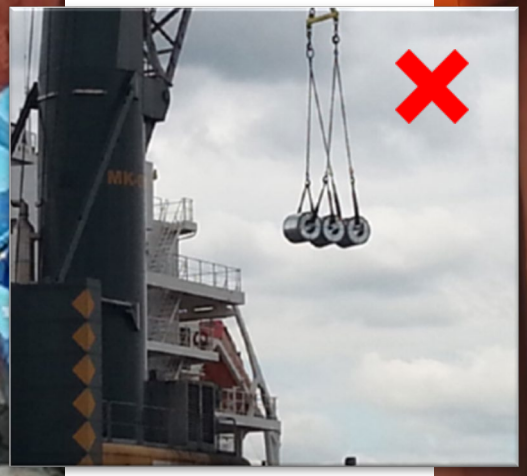

3.2 Product Handling Standards

Handling Equipment Suitability Matrix

Handling Equipment	Coil		Palletised Coils (ETTS)	Tinplate sheet packs		Heavy Gauge Sheet	Slab
	Prime	None-prime		Prime	None-prime		
Crane: Nylon Sling	✓*1	✓*1	✓	✓	✗	✗	✗
Crane: Flat braided wire	✓	✓	✓	✓	✓	✗	✗
Crane: Grabs / Clamps / Tongs / C Hooks	✓	✓	✗	✗	✗	✓	✗
Steel Cable	✗	✓	✓	✗	✓	✗	✓
Crane: Chains	✗	✗	✗	✗	✗	✗	✓
FLT: Flat Blades	✗	✗	✓	✓	✓	✓	✓
FLT: Pole	✓	✓	✗	✗	✗	✗	✗
FLT: Grabs / Clamps/ Tongs / C Hooks	✓	✓	✗	✗	✗	✗	✗
Magnet	✓*2	✓*2	✗	✗	✗	✗	✓
Scissor Grabs	✗	✗	✗	✗	✗	✗	✓

*1 - Do not use Nylon Slings without protection on Hot Rolled material or Cold Rolled material without inner/outer protection rings visible on the outside of the packaging.

*2 - If coil weight < weight magnet: forbidden to use magnet

3.3 Product Handling Standards

Use of Cranes: Coil

Grabs / Clamps / Tongs

C Hook

Chains

Magnet

Wire Braided Sling

Nylon Sling

3.4 Product Handling Standards
Use of Forklift Trucks: Coil

Pole/Ram

Must be chamfered on the face and must have a rubber bumper (tire with an outside diameter 10 cm larger than the coil bore) protection at the mast end
Must always enter the bore at a 90 degree angle to the coil face

Must be of compatible diameter to suit the size and weight and bore diameter of the coil. The radius should be a minimum of 150 mm (6 inches)

The operator must have good visibility of the pole/ram entering the coil bore

The pole/ram must always extend through the full width of the coil

Grabs & Clamps

Must be of compatible diameter to suit the size and weight of the coil

The operator must have good visibility to see how and where the grabs clamps contact the coil
Lifting surface should have a minimum radius of 150 mm (6 inches)

Flat FLT Blades

Prohibited at all times with conventional (eye-horizontal) coils

3.4 Product Handling standards

Use of Forklift Trucks: Coil

1. If not driven in or out correctly, the coil pole/ram can easily damage the core or the side wall of the coil.
2. Improper handling also increases the risk of bands breaking and damage to the inner laps of the coil.
3. When driving a coil pole/ram in or out, it is vital that it is placed at the right height and in line with the core of the coil. Failure to do so will result in material damage.

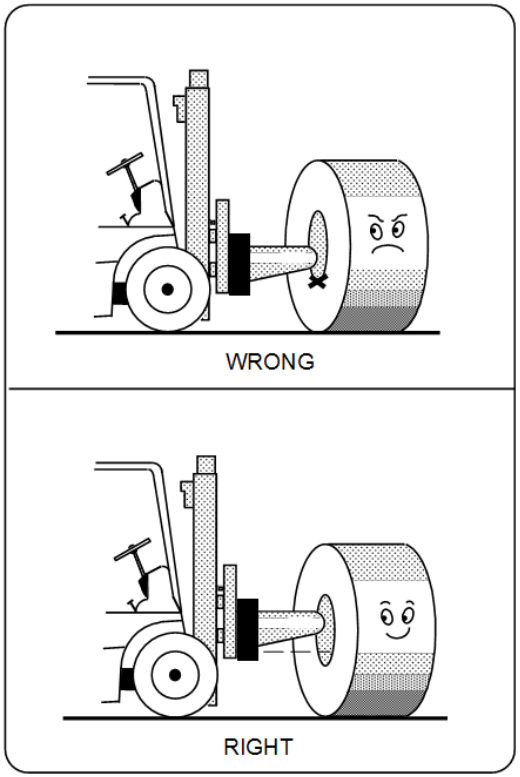

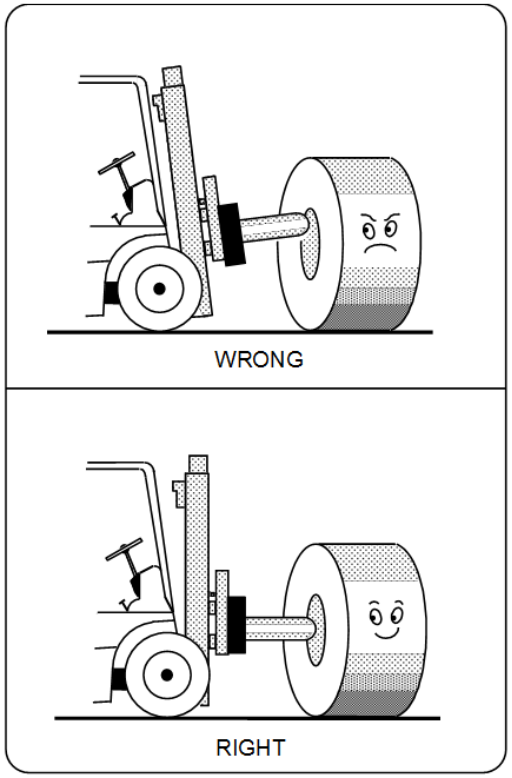

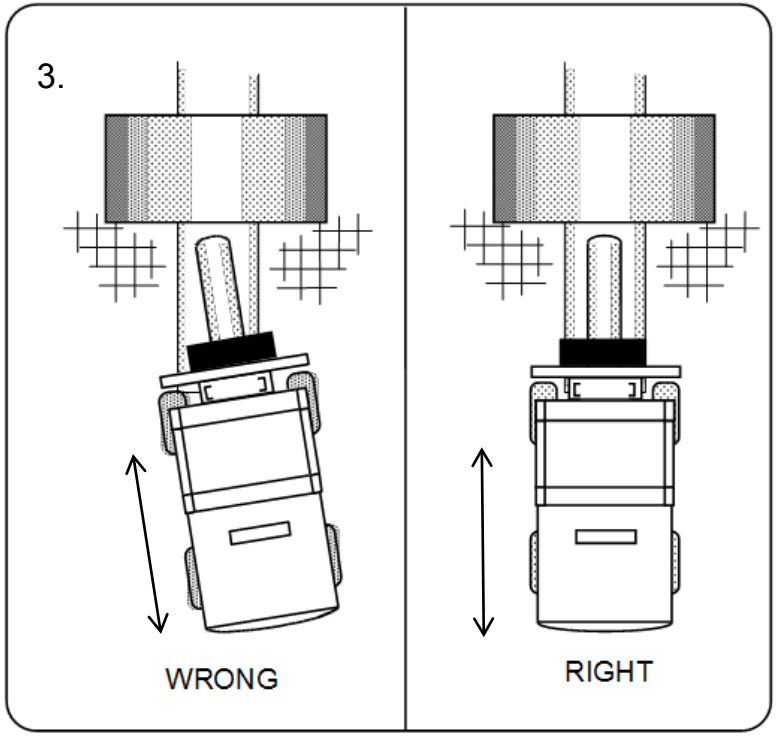

3.4 Product Handling Standards

Use of Forklift Trucks: Coil

1. Damage may occur when driving too fast either backwards or forwards.
2. The coil must be lifted at a sufficient height during transport and the coil ram should lean slightly backwards.
3. Coils must be positioned with enough space in between the coils to prevent the risk that coils will touch each other.
4. The length of the coil pole/ram must be slightly longer than the width of the coil.
   If the coil pole/ram is too long, the pole/ram may protrude through the bore and strike the coil behind it, leading to damage.
   If the coil pole/ram is too short, the pole/ram will cause damage to the bore of the coil when lifted.
   Avoid all contact between the coil and the apron of the truck.

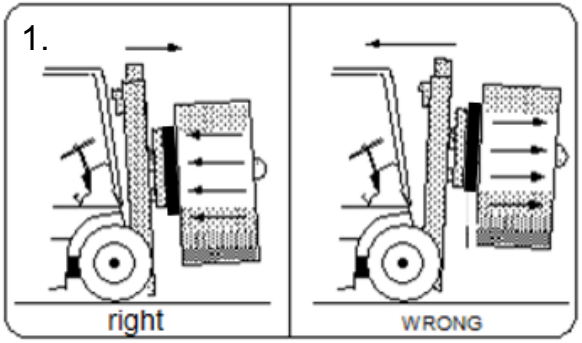

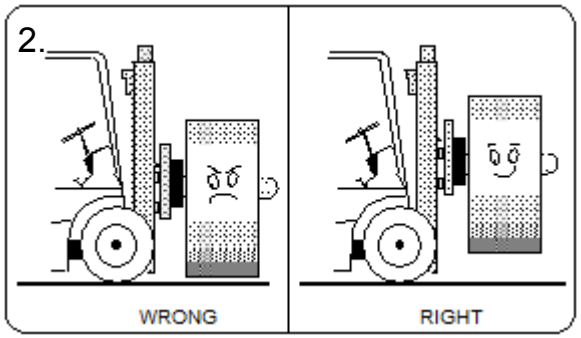

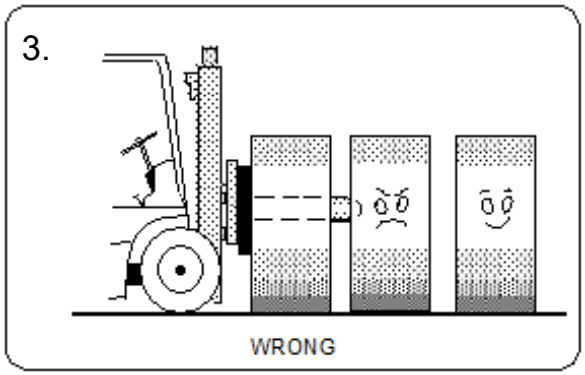

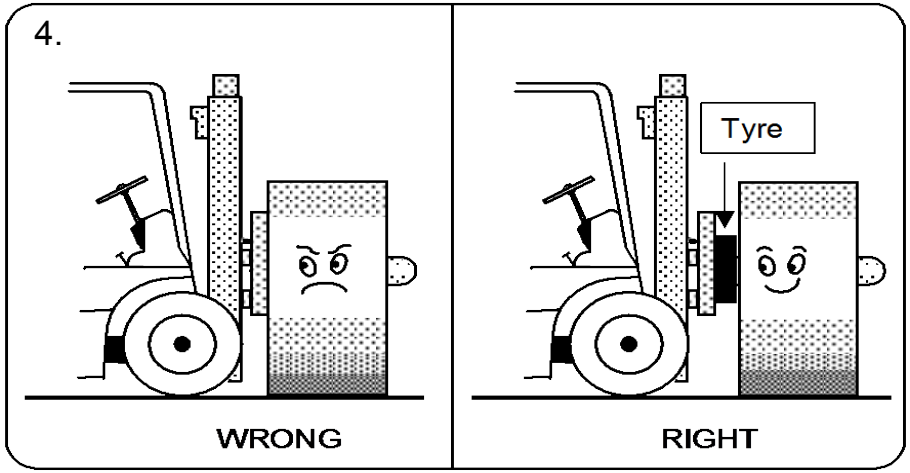

3.4 Product Handling Standards

Use of Forklift Trucks: Coil

Floors must be level and in good condition to prevent the coil sliding off the coil pole/ram while driving

When the coil is placed in the warehouse, the coil pole/ram must be in a horizontal position to avoid damage to the outer laps.

All coils must be placed into storage using a method outlined in section four of this standard.

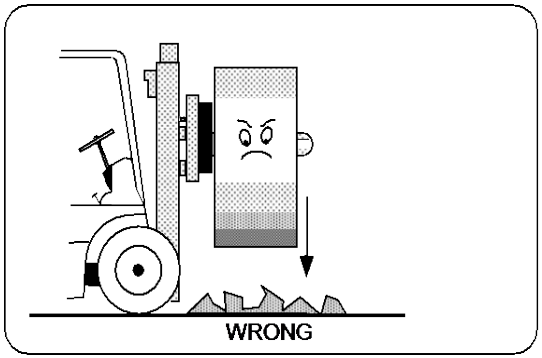

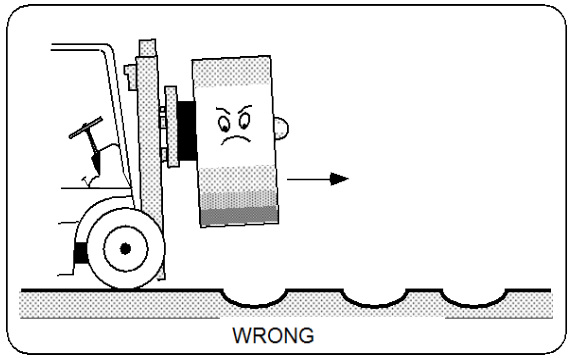

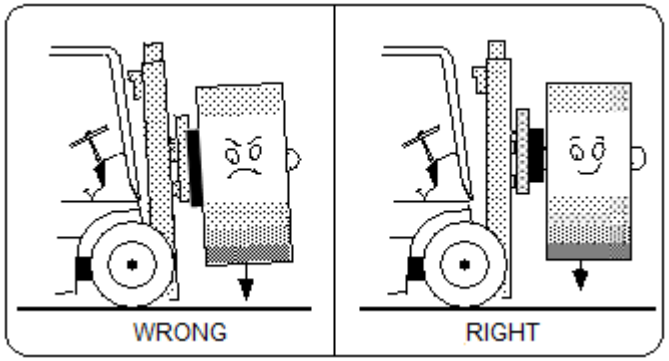

3.5 Product Handling Standards

Use of Cranes & FLTs: Palletised Coils

Choosing the correct sized forks, set to the correct spacing

Forks must be :

- ✓ Correct length
- ✓ Set to the correct spacing

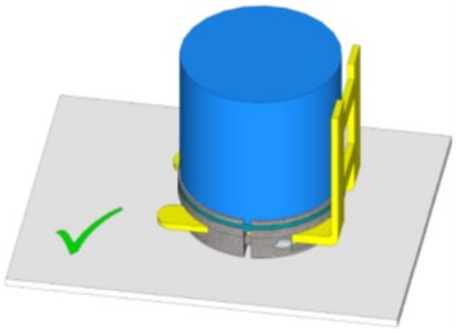

DO NOT enter forks:

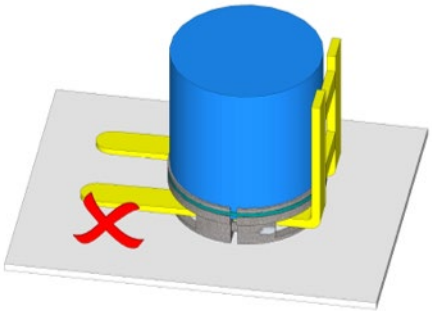

× Too long – likely to hit adjacent coils

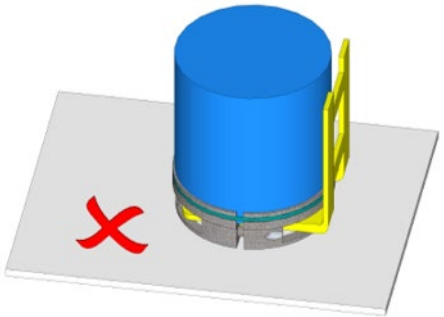

× Too short - unsafe

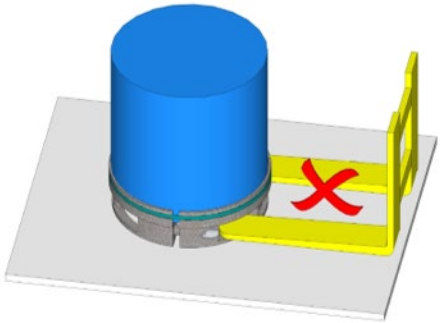

× Too wide – likely to damage skid pallet

3.5 Product Handling Standards
Use of Cranes & FLTs: Palletised Coils

Entering forks into the pallets

Enter forks:

- ✓ Horizontally
- ✓ In-line with the pallet

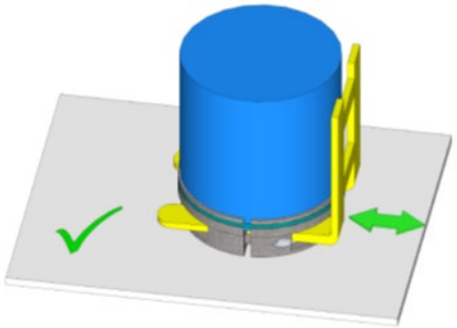

DO NOT enter forks:

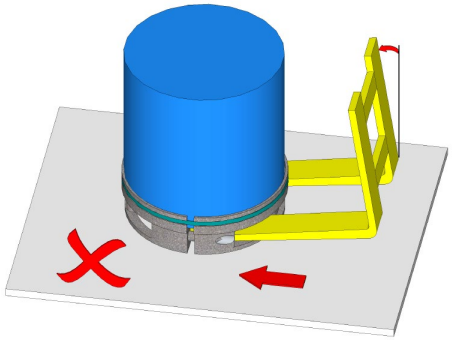

× Tipped down

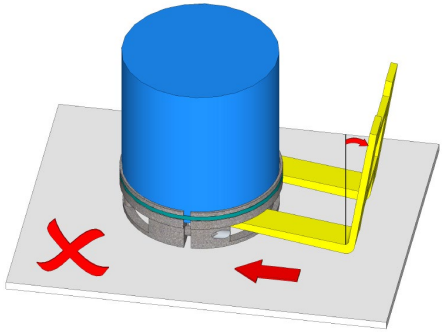

× Tipped up

3.5 Product Handling Standards
Use of Cranes & FLTs: Palletised Coils

Entering forks into the pallets

Enter forks:

✓ In-line with the pallet fork holes

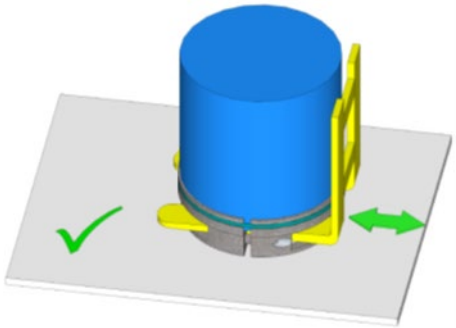

DO NOT enter forks:

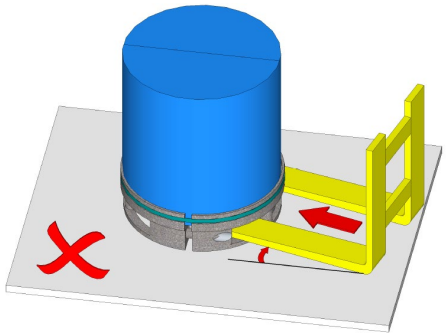

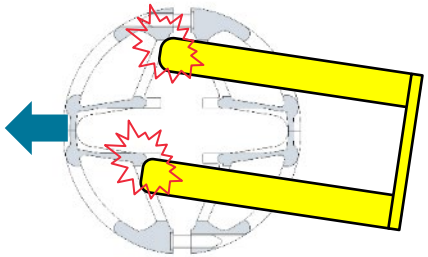

× At an angle to pallet - Forks may break the pallet apart and break the band

3.5 Product Handling Standards
Use of Cranes & FLTs: Palletised Coils

Lifting and lowering Coils

Lift coil:

- ✓ Vertically
- ✓ Forks full engaged in the pallet

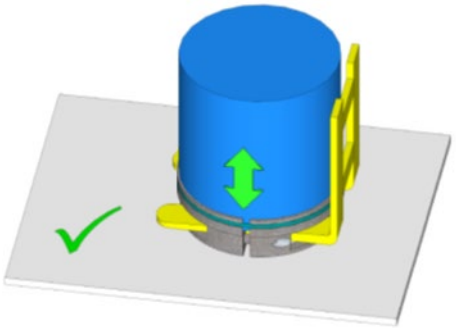

DO NOT use the tips of the forks:

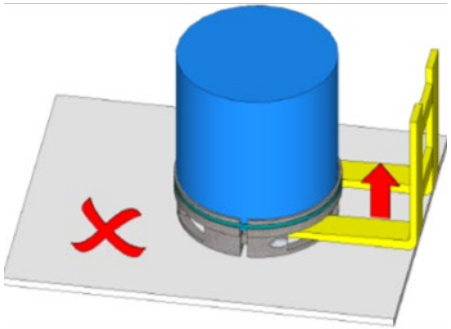

- × Do NOT use the tips of the forks
- × Do NOT lift one half of the pallet

3.5 Product Handling Standards
Use of Cranes & FLTs: Palletised Coils

Lifting and lowering Coils

Lift coil:

- ✓ Vertically
- ✓ Forks full engaged in the pallet

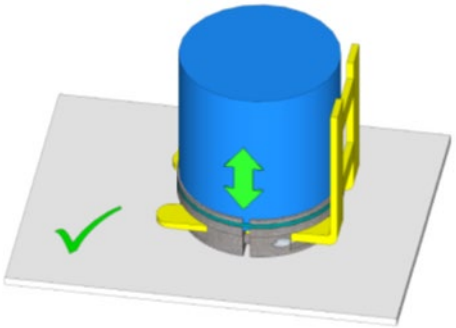

DO NOT:

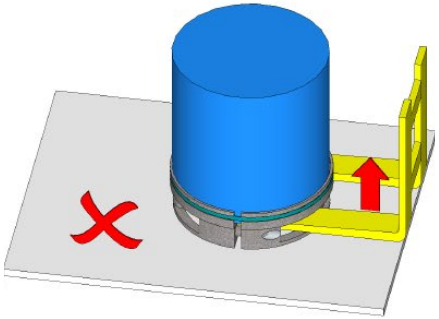

× Tip the coil

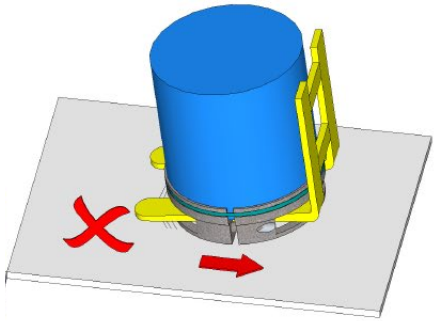

× Drag the coil

3.5 Product Handling Standards

Use of Cranes & FLTs: Palletised Coils

Antislip matting must be used under load

Antislip matting must be used under load

- Preferred option is using a lifting platform.
- For platforms without a solid barrier at the perimeter anti-slip matting is to be applied under the product to be lifted. Note - Chains or straps do not form a solid barrier.
- Platforms must be free from standing water and be kept free from ice during operations in cold weather.

Platform with solid barrier

3.5 Product Handling Standards

Use of Cranes & FLTs: Palletised Coils

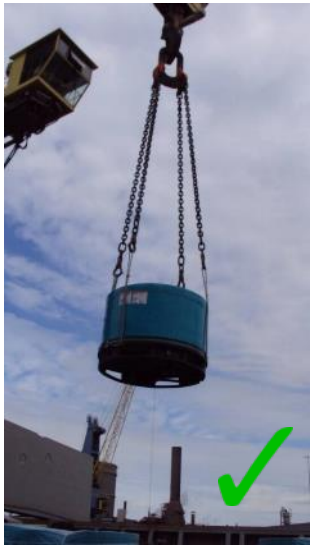

- Wooden pallets to be slung under main beams.
- Lifting equipment to go inwards from top of coil to assist in stability. This equipment may make contact with top edge of coil.
- Lengthening chains and hooks must always be above the top of the coil.
- One end of each sling / wire rope is to be fixed in place to prevent accidental unattachment of both ends of one sling / wire rope

3.6 Product Handling Standards

Use of Cranes: sheet packs/bundels

Slings

Flying forks

3.6 Product Handling Standards

Use of Forklift Trucks: sheet packs/bundels

Flat Forks

- Not allowed to transport more than one stack with bundles
- Best practice to use a small forklift (5ton) to handle bundles
  > Stack with bundles at the end of the forks can cause bouncing, which can lead to falling of the bundles

3.7 Product Handling Standards
Use of Cranes: Sheet

Sheet Handling Cranes

Clamps must be suitable for the length of sheet being moved

3.8 Product Handling Standards
Use of Forklift Trucks: Sheet

Flat Forks

Forklift trucks must have sufficient capacity to handle sheets

Forklift trucks must be equipped with flat forks of sufficient thickness, length and have adequately spaced blades

Material must be spaced with adequate levels of timber dunnage for access of the forks

3.9 Product Handling Standards
Use of Cranes & FLT: Slab

Flat Forks

Slabs being moved by flat forks must be separated by dunnage of sufficient thickness

Mechanical Scissor Grab

Magnet Clamp

Chains

Reach Stacker

4.0 PRODUCT STORAGE STANDARDS

4.1 Product Storage Standards
General Storage Guidelines

Handling should be kept to a minimum to avoid damage

Location accuracy must be maintained at all times from the time of receipt by updating the location of the coils in the vendors' inventory management system if the coil is moved .

All cargo must be treated as weather sensitive*[1] unless instructed otherwise by Tata Steel.

Where hot rolled and export wrapped coils are stored in the same warehouse, the material must be segregated where reasonably practicable. Where this is not possible, hot rolled coil must not be stacked on top of packed material due to the increased risk of packaging damage.

*1 Weather sensitive: risk on quality defects when exposed to climatic conditions such as rain, snow, dust etc.

4.2 Product Storage Standards
Condensation

There is the potential for condensation to settle on material should certain climate conditions arise.

Should you note condensation forming on Tata Steel material, please contact your Tata Steel quality representative as soon as possible in order to receive further guidance.

Before any material is loaded for onward movement it is expected that the material will be dried.

Note: for unwrapped cold rolled & galvanised material, product should be ‘dabbed’ dry as wiping will contaminate surface condition of material.

4.3 Product Storage Standards
Coil Storage: Racking

Removable shoes

All stillages/cradles must be adequately lined to protect the product.

All stillages/cradles and channels must be free of debris

Fixed stillages/cradles

All stillages/cradles must be adequately lined to protect the product.

All stillages/cradles must be free of debris

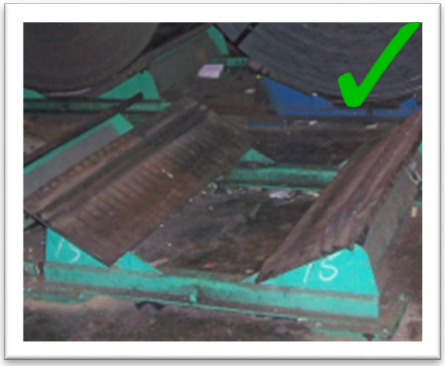

Chocks

All coils must be placed on either flat wooden dunnage or rubber sheeting in combination with the use of chocks

Coils must be chocked from both sides (see sections 4.4/4.5 for further guidance)

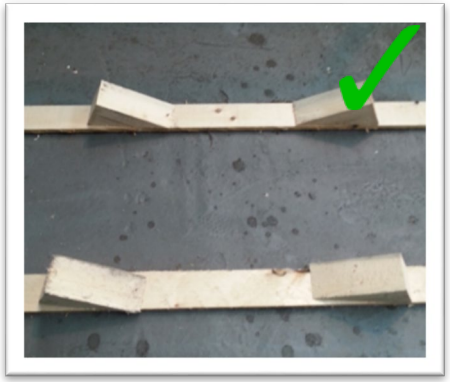

4.4 Product Storage Standards
Coil Storage: Chocks/Wedges

Dimension

The chock should be a minimum of 100 mm (4 inch) x 150 mm (6 inch) to bear the weight of the material

Where possible, use hardwood or rubber wedges.

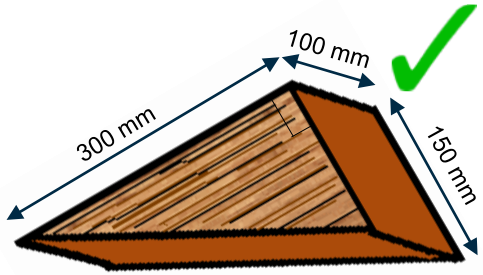

Condition

All chocks must be free from inclusions and splits

Position

The 90° angle of the chock must always face the coil to avoid splitting.

Treatment

All chocks/wedges used on sea going vessels must be treated and stamped according to ISPM15

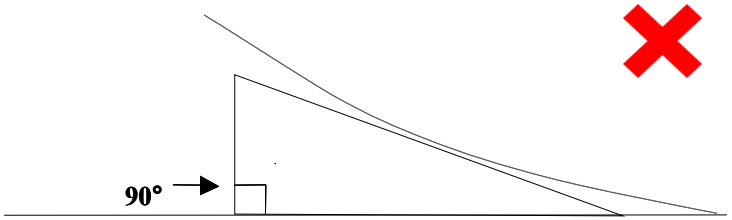

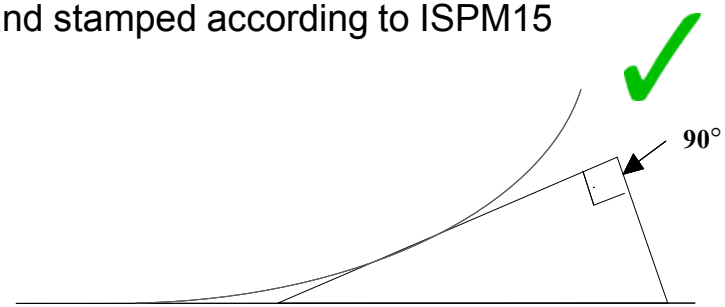

4.5 Product Storage Standards
Coil Storage: Chocking Standards

End of Rows

End coils must have a minimum of three chocks at the end of the row

Within the Rows

Within a row, each coil must have a minimum of two chocks on both sides of the coil

Space created within rows where people can walk in between and where double stacking has occurred must be treated as end coils

Chocks must be placed parallel to each other on both sides of the coil in order to provide adequate support to the coil

4.6 Product Storage Standards
Coil Storage: Sheeting & Dunnage

Placement

No part of a coil should be in contact with the warehouse floor.

Rubber Sheeting

Should be at least 20mm (0,8 inches) in thickness

Wooden Sheeting

Only plywood sheeting is acceptable.

Should be at least 20mm (0.8 inches) in thickness.

Wooden Dunnage

Should be at least 20mm (0.8 inches) in thickness & 120mm (4.7 inches) in width. No part of the coil should be in contact with the warehouse floor

It is essential that all dunnage is dry

4.7 Product Storage Standards

Coil Storage: Rubbers, Segregation & Weights

Rubber Strips

Rubber strips of sufficient thickness and width (10mm x 150mm) (0.4 x 6 inches) must be placed between coils when double stacking on non-export packed, non-HRC material. Lamiflex (soft board straps) as part of the packing is deemed a suitable alternative.

Coil Segregation

Only Durbar (Checker Plate) can be stacked on top of Durbar (Checker Plate)

Hot Rolled coils must not be stacked upon, Cold Reduced or Galvanised material

Unpacked Cold Reduced / Galvanised products cannot be stacked on Hot Rolled material

Coil Weights

Heavier coils must not be placed on top of lighter weight coils

4.8 Product Storage Standards
Coil Storage: Double Stacking

Storage of coils should be limited to a maximum of two tiers in height

Top coils must not be suspended, they must have surface contact with both of the base coils

Top coils must be lighter than base coils

Space between rows must be a minimum of 100 mm (4 inches)

For those location where coils are picked from the middle of the row spacing between the coils is preferred to prevent (packaging) damages

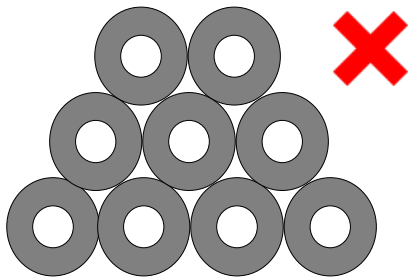

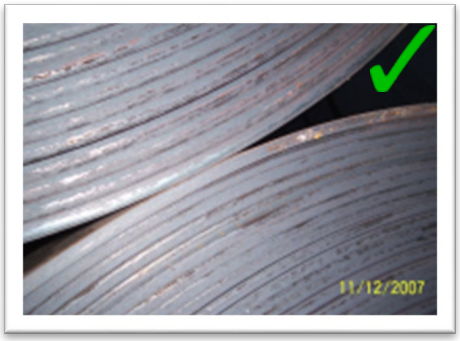

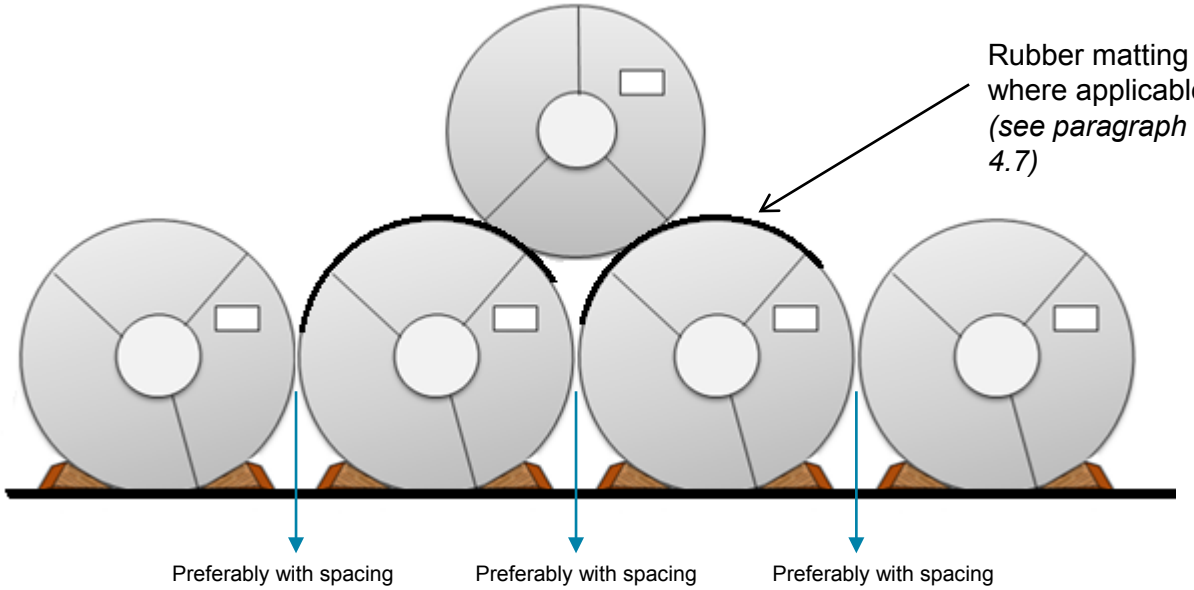

4.9 Product Storage Standards

Tata Steel Packaging material destined for the food industry

Material from Tata Steel Packaging (TSP) is destined for use in the food industry; therefore, these have extra requirements with regards to storage, inspection and repair of packaging/material damage. These requirements are valid for Eye To The Sky (ETTS) coils and Packaging Sheet Packs.

These extra requirements are: -

- Products are to be store 50cm away from all walls and pillars etc.
- Products are to be stored away from external doorways (openings that cannot be closed during rain and strong winds). This distance is to be the same as the height of the door opening.
- Any packing damage must be repaired as soon as possible and no later than 12 hours after the packaging is damaged.
- All damages to packaging and or material must be checked for contamination, either accidental or deliberate.

There are further requirements for warehouses used to store TSP products, these are to be found in the current version of the warehouse classification document.

4.10 Product Storage Standards

Coil Storage: Full Finish

Coils identified with a ‘Full Finish’ sticker have been identified as coils that have an increased risk of surface damage in some certain circumstances due to the soft nature of the material.

One of the circumstances that has been identified as a risk is during storage in a warehouse where coils are stacked.

Coils with the above sticker should not have any other coils placed on top of them. These coils may be stored in an approved storage system (as described in the GP&WS) at ground level or placed on top of other coils, so long as these other coils do not have any stacking restrictions.

These coils should also be stored and handled in accordance to the general rules in this document.

There are restrictions for the stowage of these coils which are described in the relevant section - 7. Vessel Dispatch Standards.

It is important that the processes for coils identified with ‘Full Finish’, ‘Top Stowage’ and ‘Geverfd Product / Organic coated strip’ stickers are not confused, mixed.

4.11 Product Storage Standards

Coil Storage: Top stowage

Coils identified with a so called ‘Top Stowage’ sticker have been identified as coils that have an increased risk of surface damage and ovalisation in some certain circumstances.

These circumstances have been identified as during transport per short/deep sea where the coils are stowed in a tight form exerting pressure on each other.

‘Top Stowage’ coils do not have any special requirements with regards to storage/handling in the warehouse or during transport per truck, rail or inland waterways.

These coils should however be stored and handled in accordance to the general rules in this document.

There are restrictions for the stowage of these coils which are described in the relevant section - 7. Vessel Dispatch Standards.

It is important that the processes for coils identified with ‘Top Stowage’, ‘Geverfd Product / Organic coated strip’ and ‘Full Finish’ stickers are not confused, mixed.

4.12 Product Storage Standards

Coil Storage: Geverfd Product / Organic coated strip

Coils identified with a ‘Geverfd Product / Organic coated strip’ sticker are colour coated coils that have been identified as coils that have an increased risk of surface damage and ovalisation in some certain circumstances.

One of the circumstances that has been identified as a risk is during storage in a warehouse where coils are stacked.

Coils with the above sticker should not have any other coils placed on top of them. These coils may be stored in an approved storage system (as described in the GP&WS) at ground level or placed on top of other coils, so long as these other coils do not have any stacking restrictions

These coils should however be stored and handled in accordance to the general rules in this document.

There are restrictions for the stowage of these coils which are described in the relevant section - 7. Vessel Dispatch Standards.

It is important that the processes for coils identified with ‘Top Stowage’, ‘Geverfd Product / Organic coated strip’ and ‘Full Finish’ stickers are not confused, mixed.

4.13 Product Storage Standards
Sheet Storage: Stacking Standards

Storage

Sheets should be stacked on vertically aligned timber bearers

Base bearers should span the width of the base sheet pack

All bearers should be hard wood and uniformly placed to avoid sagging.

Where possible, products should be segregated by size / width to simplify material handling

Where possible stacks should have labels on one end, to help manage storage of material

Stacks should be adequately and evenly spaced to allow handling equipment to lift them

Stacking height should be restricted to a maximum of 1,7 m (5.5 feet) regardless of bundle sizes

Heavier stacks must never be placed on lighter stacks

Stacks must always be stacked largest to smallest upwards

Do not mix product type – i.e. do not stack pickled and oiled with dry material due to contamination risk.

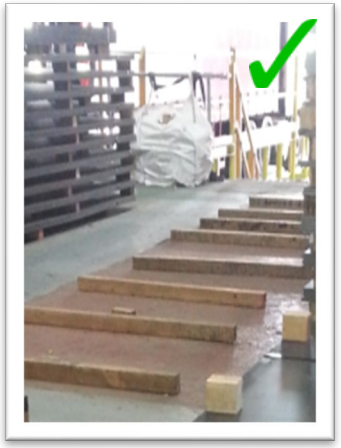

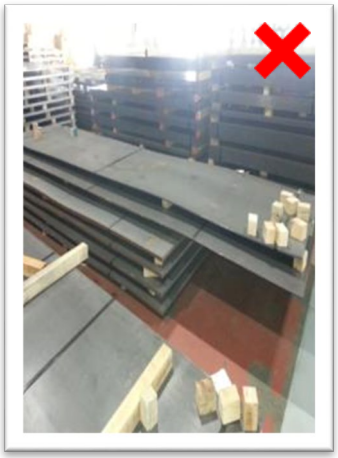

4.14 Product Storage Standards
Slab Storage: Stacking & Timber

Stacking of Slabs

Stacking height should be limited to a maximum of six slabs

All bearers must be at least 100mm (3.5 inches) thick and be able to support a full stack

Where possible slabs of differing widths and lengths should be stored separately

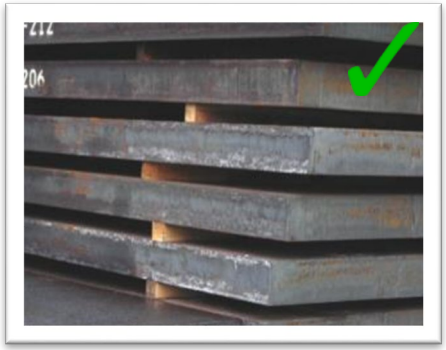

Timber

Each slab should be suitably separated by means of timber

Timber spacing must be maintained between each slab to allow forklift trucks to lift them

Timbers should be laid at least one meter from both ends of the slab

Timbers may be omitted if magnets or scissor lifts are used to handle slabs

4.15 Product Storage Standards
Palletised Coils Storage (ETTS)

Stacking

Palletised coils must be stacked no more than three high.

Sufficient spacing must be left between rows to enable easy access to the material (400mm / 16 inches minimum on each side). Within a row, a minimum of 150 mm (6 inch) and a maximum of 300 mm (12 inch) spacing must exist between each stack

Top stacked coils must never overhang coils underneath

Heavier coils must never be stacked on top of lighter coils

Any material damage must be communicated to your Tata Steel quality contact and the material quarantined immediately

4.16 Product Storage Standards
Sheet Bundle Storage

Stacking

- Only stack bundles of same dimensions
- Timber bearers should be placed vertically in line
- Sufficient space should be provided between bundles for damage free handling (minimum of 100 mm (3.5 inches) on each side)
- Stacking height is restricted to a maximum of six bundles
- Any material damage must be communicated to your Tata Steel quality contact and the material quarantined immediately

4.17 Product Storage Standards
Quarantine Standards

Quarantine Process

- All blocked coils must be placed in a clearly identified quarantine area.
- All material in the quarantine area must be marked and entered as blocked in the service providers' inventory management system to prevent dispatch to the customer.
- All material must be suitably labelled advising the respective issues for being quarantined.
- Tata Steel must be notified of all quarantined material per the Service Level Agreement.
- If damage is suspected to be due to the fault of the service provider, the incident must be reported immediately, investigated to determine root cause and corrective actions will be jointly agreed upon.
- Once quarantined material has been released, the quarantine form and other relevant documents should be removed from the material and retained by the facility for 12 months.

5.0 TRANSHIPMENT FACILITY STANDARDS

5.1 Transhipment Facility Standards

Transhipment Standards

A transhipment facility is used to transfer material between different modes of transport and/or facilities . All facilities must be approved by Tata Steel to tranship material before they can proceed.

Transhipment Guidelines

Product handling must be kept to a minimum

The facility must be suitable for the product type, in accordance with Tata Steel Warehouse Standards

All handling and storage standards as outlined in this document must be adhered to at all times

Transport to the facility must be completed in accordance with the relevant TSE standards documents:

- The method of transport used to transport the material to and from the transhipment facility must be able to protect the TSE material from any potential water ingress.
- Full load restraint standards must be applied to all loads to and from the facility unless a partial load restraint risk assessment has been completed and signed off by Tata Steel.

6.0 DIRECT DISPATCH STANDARDS

6.1 Dispatch Standards
Pre-dispatch Inspection

Quality Check

Tata Steel is reliant on service providers to provide a final quality check prior to presenting the material to the customer. It is vital that material is free of dust and dirt and free of defects/damage before release to the final customer

All material should be inspected for damage and non-conformance to Tata Steel standards of packaging, labelling, etc. prior to dispatch

The coil width and label information should be checked prior to departure to ensure the coil matches the delivery note/label.

Where appropriate, material must be dispatched according to the customer specific requirements outlined in the service providers' SLA

Any issues should be highlighted to your Tata Steel quality representative as soon as possible

6.2 Dispatch Standards
Decanning Process

Preparing coils for de-canning

The de-canning operation is a customer-specific activity that will be agreed between Tata Steel and the external facility prior to commencing

- De-canning of the coil must take place in a location reserved for this activity,
- Refer to delivery point specific guidelines contained in the individual storage facility SLA (where applicable)
- Sufficient space must be available for safe removal of packaging, minimum of 1 meter
- Material must be sufficiently supported during the de-canning process per applicable SLA
- Ensure there is a risk assessment and safe working procedure for the de-canning process
- Visually inspect material against customer specific standards – all non-confirming material should be quarantined

6.3 Dispatch Standards
Proof of Loading

Service Providers must check that all trucks, trailers and rail cars are dry, clear of debris and have no protruding objects that could damage the material.

Service Providers' employees and drivers must:

1. check that the Tata Steel product identity on the material label matches the coil number on the delivery order/transport document
2. check that the Tata products loaded are in good condition, any deviation should be noted on all versions of the transport document
3. sign the transport document

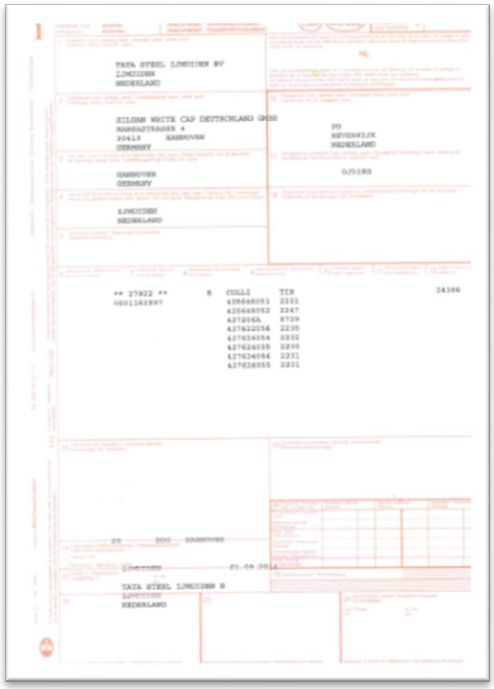

6.4 Dispatch Standards
Load Restraint Guidelines

The method of Load Restraint used for all Tata Steel products must be compliant with local legislation (for EU the forces specified in EN 12195; for the US, the Federal Motor Carrier Safety Administration Regulations (FMCSA)).

If not directed by local legislation, Tata Steel considers the chain of responsibility for a safe load does not start and finish with the driver. The consigner/shipper, loader, hauler, driver and receiver all have a part to play.

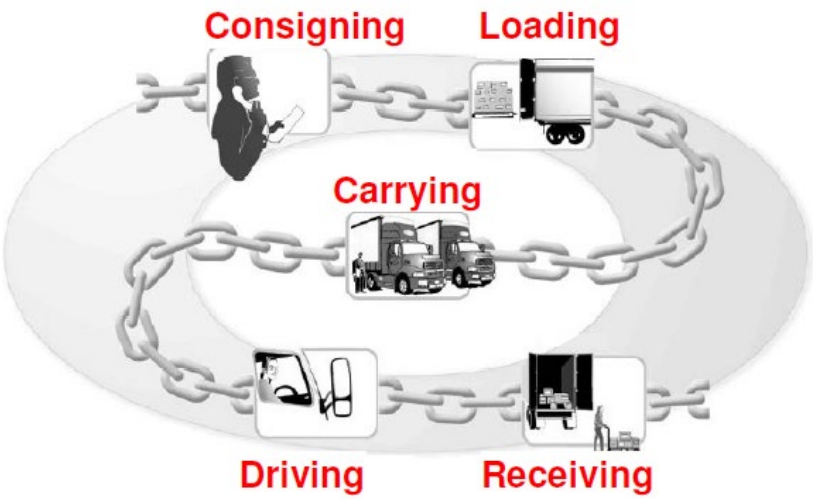

Tata Steel will provide the Load Restraint Guidelines that fulfil this requirement and these standards must be applied.

Drivers may be audited when on external sites.

7.0 VESSEL DISPATCH STANDARDS

7.1 Vessel Dispatch Standards
General Guidance

Personnel must never stand under a suspended load

Care must be taken to ensure product is not knocked against vessel / hatch combing during loading

The equipment basket must be kept away from loading activities

Care must be taken to ensure no material is stowed against any protruding items in the ship's hold.

Do not load steel products that are damaged, wet, incorrectly packed, or incorrectly labeled. Any damages must be reported to the Tata Steel quality contact and quarantined immediately.

Tata Steel appointed surveyors must be allowed access to the vessel hold during vessel loading / discharge operations

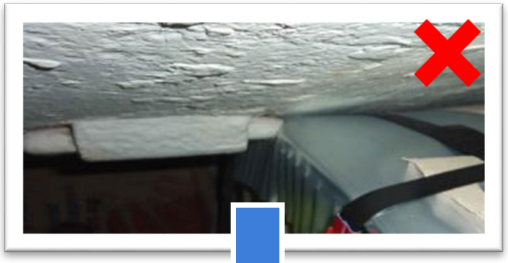

7.2 Vessel Dispatch Standards
Delivery to Vessel

Tallying

Tallies must be maintained against material leaving the warehouse and material being loaded into the vessel.

Wet Weather Working

All material must be treated as weather sensitive unless otherwise stated.

Material should not be moved from the warehouse to the quay, or stored on the quay during precipitation

All coils should be able to be covered either by waterproof sheets to ground level or moved under cover within three minutes

For vessels containing or to be loaded with any weather sensitive material, vessel hatches should be closed immediately in the event of rain. Any coils affected by water should be dried immediately and reported to Tata Steel.

Steel Coils

If coils are placed on the quay side before loading / after discharge they must be landed on even ground on adequate dunnage or suitable rubber sheeting and adequately. A local risk assessment should be conducted on requirement to chock the material.

7.3 Vessel Dispatch Standards
Loading & Discharge: Coils

Lifting Coils

A spreader bar is seen as best practice to ensure no damage is caused to the outer winding or edges of the material

Dual coil lifts (simultaneous lifting of two coils) must be lifted from the tank top or quayside only and from coils that are positioned in contact with one another prior to the lift and with a difference in diameter of less than 200 mm (8 inch)

No more than two coils should be moved in one lift

Cranes with flat braided slings, polypropylene / nylon covered or webbing slings can be used for lifting. Spreader bar are recommended to reduce strop damage (see table 3.2 for handling equipment suitability).

7.3 Vessel Dispatch Standards
Dunnage

Sea-going vessels.

All dunnage to be used in sea going vessels must be treated in accordance with ISPM15. All pieces of dunnage including wedges, shortened lengths of dunnage and off cuts must have a clear, legible IPPC stamp. Examples of stamps shown on the right.

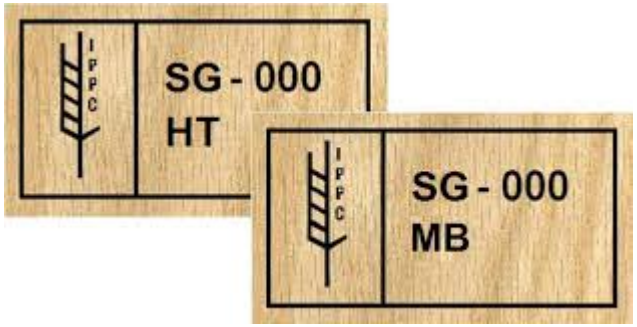

Dunnage must be clean, dry and free from mold and bark.

Re-use of dunnage,

- Tata Steel does not prohibit the re-use of dunnage but this must fully comply to all requirements with regards to new dunnage.
- Dunnage to be re-used must not be worn smooth, crushed by previous loads and still have the ISPM15 stamp clearly visible and legible.

7.4 Vessel Dispatch Standards

Stowing Cargo: Inland waterways - Coil

Coils should rest on dunnage placed on the vessel's tank top. The size and amount of this dunnage must be sufficient to prevent contact between the coil and the tank top.

Coil should be secured by chocks with minimum dimensions as stated in section 4.4 'Product Storage Standards, Coil Storage: Chocks'.

Where required, one chock should be applied for every 5 ton or part thereof coil weight. A minimum of 2 chocks should be applied irrespective of coil weight . For example: -

Coil weight (tonnes)	Number of chocks
4	2
6	2
13	3
22	5

See diagrams for examples

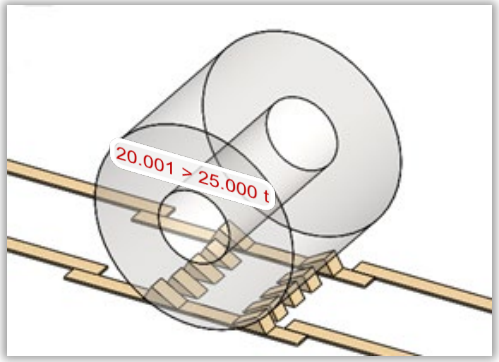

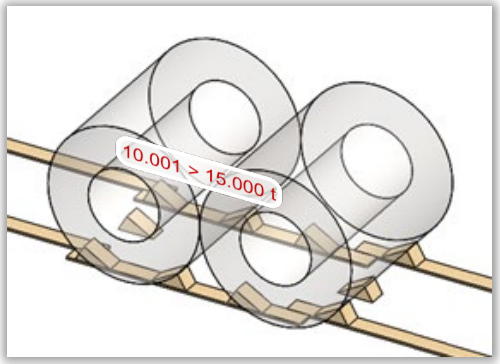

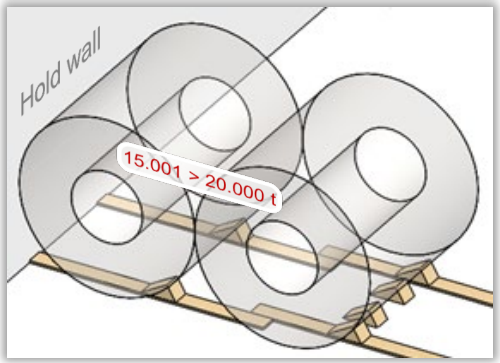

Two coils placed together require a minimum of two chocks per coil between the coils, but do not need any further chocks between the coils. The number of chocks required on the outside of the coils remains as above.

Coils placed against the side wall of the hold, either directly or indirectly, do not require chocks on the hold wall side of the coil(s).

Where possible chocks should be placed on top of the wooden planks.

7.4 Vessel Dispatch Standards
Stowing Cargo: Coil

Dunnage and Wedges/Chocks.

All dunnage, wedges/Chocks etc. must be heat treated with every piece (even if cut off a another piece) having a clearly legible ISPM15 Stamp.

At least two parallel lines of 120mm x 20mm (4.7 x 0.8 inch) dunnage should be laid on the vessel's tank top in an athwart ship direction.

If required by the Ship Masters, appropriate parallel lengths of vertical dunnage (gates) can be laid against the side of the hold by the appointed Ship Wrights.

When loading coils into the shaped areas of a vessel's hold, the wings must be made up with timber to avoid coils twisting out of the fore and aft axis.

Coil should be secured by chocks with minimum dimensions as stated in section 4.4 'Product Storage Standards, Coil Storage: Chocks'.

Stowage

Tiers and rows should be made up of material for the same destination where possible.

Where it is not possible to stow material for separate destinations in separate rows, material for the first destination should be on top of the material to be discharged later.

A bottom tier must always be made up of material for a single destination.

7.5 Vessel Dispatch Standards

Stowing Cargo: “Geverfd Product” Coil

Coils identified with a ‘Full Finish’ sticker have been identified as coils that have an increased risk of surface damage in some certain circumstances due to the soft nature of the material.

One of the circumstances that has been identified as a risk is during transport per short/deep sea where the coils are stowed in a tight form exerting pressure on each other.

‘Full Finish’ coils have the following restrictions when stowed on board a sea going vessel.

Coils may be stowed on the tank top or on top of other coils, however no coils may be stowed on top of these Full Finish coils.

These coils may not be used in the key coil combination and may not be used as , or to support, a key coil.

It is important that the processes for coils identified with ‘Full Finish’, ‘Top Stowage’ and ‘Geverfd Product / Organic coated strip’ stickers are not confused, mixed.

7.6 Vessel Dispatch Standards

Stowing Cargo: Top stowage Coil

Coils identified with a so called ‘Top Stowage’ sticker have been identified as coils that have an increased risk of surface damage and ovalisation in some certain circumstances.

These circumstances have been identified as during transport per short/deep sea where the coils are stowed in a tight form exerting pressure on each other.

‘**Top Stowage’ coils have the following restrictions when stowed on board a sea going vessel.**

Coils may be stowed on the tank top or on top of other coils, however no coils may be stowed on top of these ‘top stowage’ coils.

The only exception is in the key coil combination where if no other suitable option is available ‘top stowage’ coils may be used as, or to support, a key coil**.**

It is important that the processes for coils identified with ‘Top Stowage’, ‘Geverfd Product / Organic coated strip’ and ‘Full Finish’ stickers are not confused, mixed.

7.7 Vessel Dispatch Standards

Stowing Cargo: Geverfd Product / Organic coated strip Coil

Coils identified with a ‘Geverfd Product’ stickers are colour coated coils that have been identified as having an increased risk of damage to the surface in some certain circumstances.

One of the circumstances that has been identified as a risk is during transport per short/deep sea where the coils are stowed in a tight form exerting pressure on each other.

‘Geverfd Product’ coils have the following restrictions when stowed on board a sea going vessel.

Coils may be stowed on the tank top or on top of other coils, however no coils may be stowed on top of these ‘top stowage’ coils.

The only exception is in the key coil combination where if no other suitable option is available ‘geverfd product’ coils may be used as, or to support, a key coil.

It is important that the processes for coils identified with ‘Top Stowage’, ‘Geverfd Product / Organic coated strip’ and ‘Full Finish’ stickers are not confused, mixed.

7.8 Vessel Dispatch Standards
Stowing Cargo: Coil

Stowage of coils in non-box vessel holds

A minimum of two rows of dunnage and wedges (chocks) should be used between the coils and the tank top.

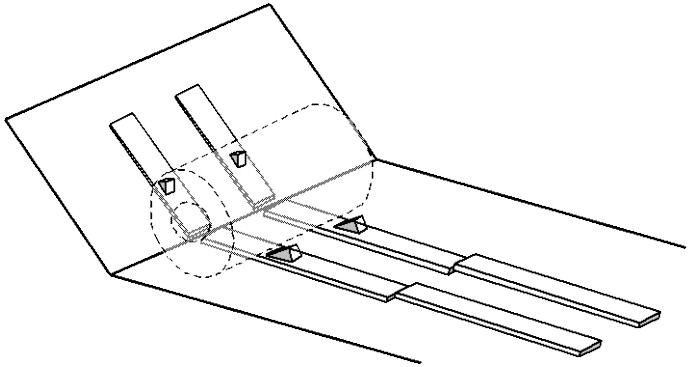

Dunnage should be used between end coil and the hopper tank.

Chocks should be placed between the end coil and hopper tank

Adequate vertical lashing should be used to ‘lock up’ the other coils or rows

7.8 Vessel Dispatch Standards
Stowing Cargo: Coil

General coil stowage configurations for non-box holds

First and last row

Stacking height of one

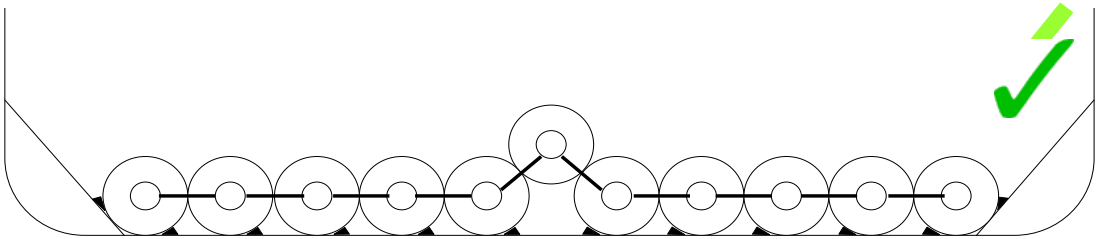

Inner rows

Stacking height of 1

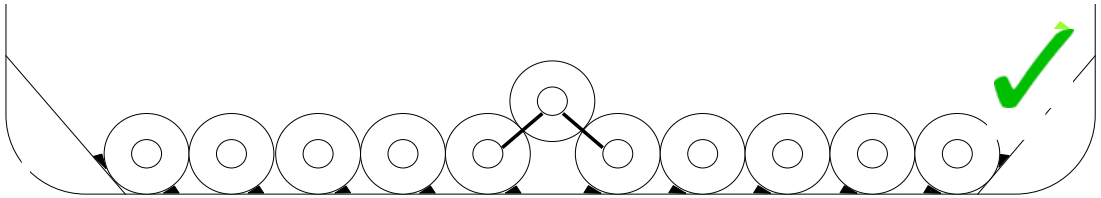

Stacking height of 2

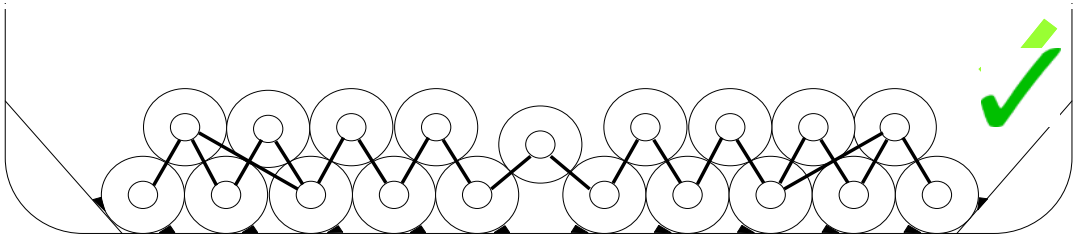

Stacking height of 3

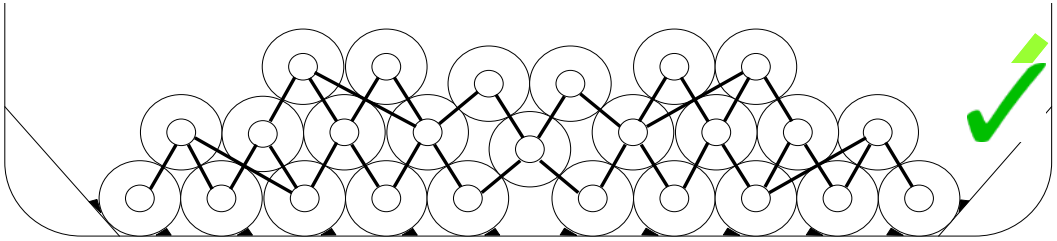

7.8 Vessel Dispatch Standards
Stowing Cargo: Coil

General coil stowage configurations for box-type holds

All cargo should be lashed with tested, certified steel bands

If coils are to be placed 3-high, the bottom tier doesn't have to be lashed to the second tier. Only the top two layers need lashing.

Where the side wing of the vessel can lead to material damage, dunnage must be placed, or material must be stowed around the protrusions.

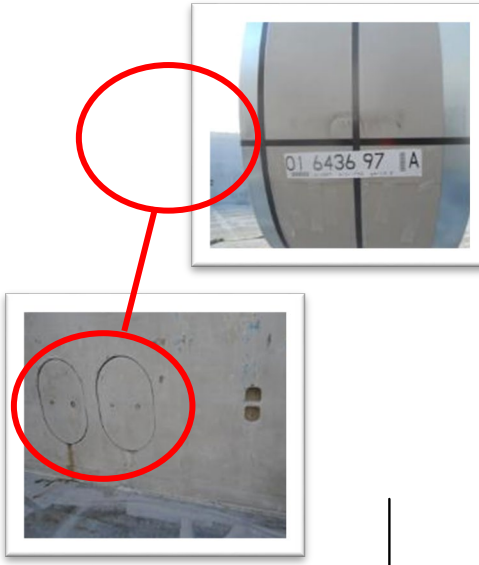

First and last row

Stacking height of 1

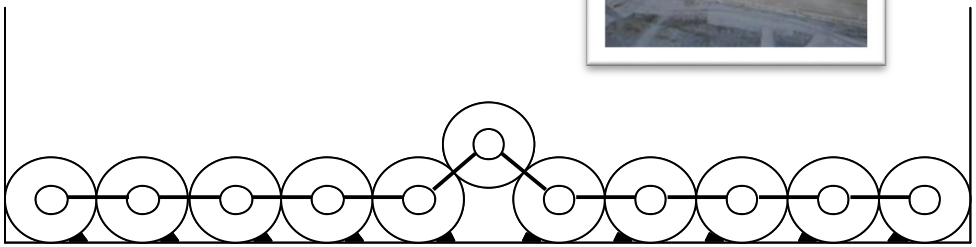

Each coil is lashed to the adjacent coil

Inner rows

Stacking height of 1

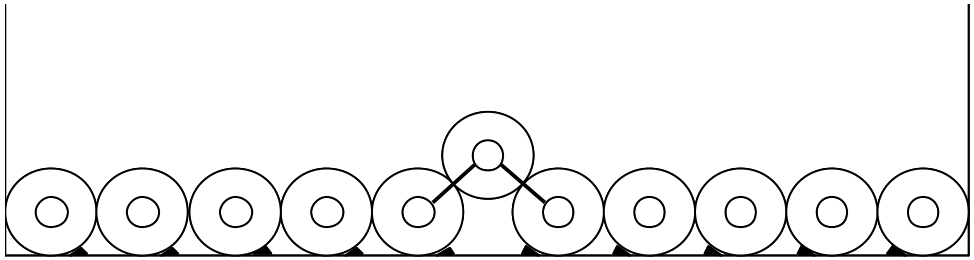

Only the locking is lashed

7.8 Vessel Dispatch Standards
Stowing Cargo: Coil

General coil stowage configurations for box-type holds

Inner rows

Stacking height of 2

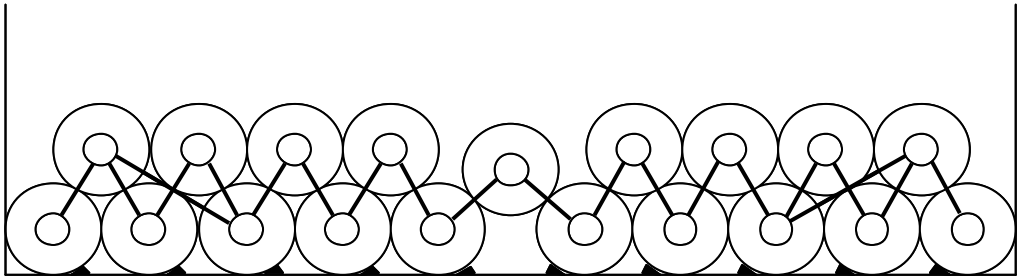

Stacking height of 3

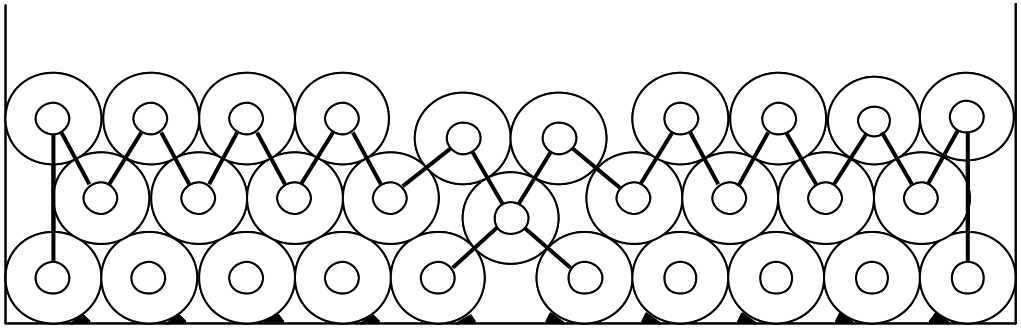

7.9 Vessel Dispatch Standards
Lashing Cargo: Coil

Only complete rows of coils are to be loaded, utilising at least one locking coil.

Locking coils should be compatible in size with other coils in the row.

Locking coils should always be lashed through the eye of the immediate adjacent coil below.

The locking coil should be placed at the correct height in relation to the other coils in the row to obtain maximum effect.

Upper limit: the key coil must rest with at least 1/3 of its diameter below a line drawn between the top edges of the coils below.

Lower limit: the bottom centre of the locking coil should clearly be above the top of the centre of the coils below.

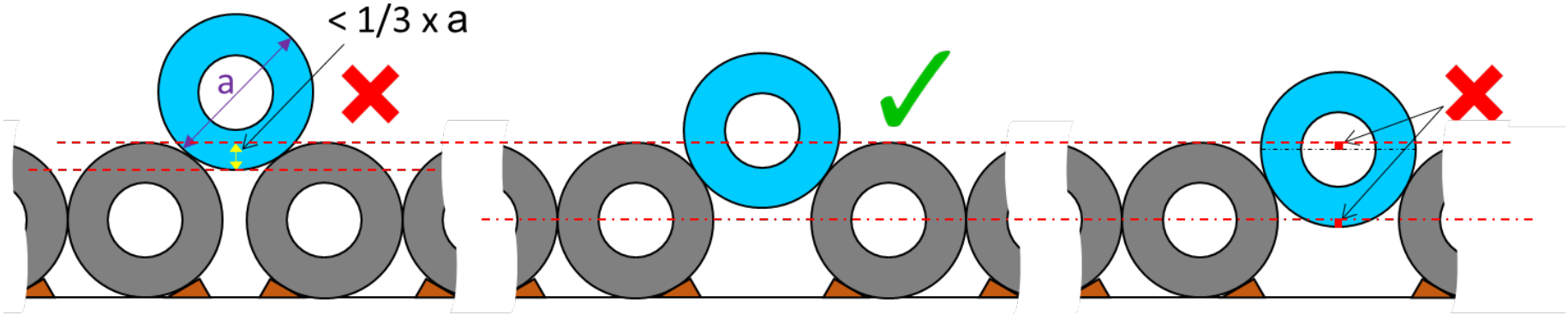

7.10 Vessel Dispatch Standards
Loading & Discharge: Pallet / Sheet Steel

Palletised Coil

Flying forks (pallet arms) or suitable webbing slings can be used

Forklift trucks used for stowage purposes must be equipped with flat forks and suitably spaced blades

Platforms can be used to handle palletised coils

Palletised coils should not be stacked on top of platforms

Packed sheets

The use of crow bars, pincer bars, chains or cables in direct contact with material is strictly prohibited

Sheets must be spaced with timbers of suitable dimensions as to avoid pallet arms catching material

Packed sheet bulks can be stacked up to a maximum of three high on platforms

7.11 Vessel Dispatch Standards
Stowing Cargo: Sheet Packs

Stacking height of pallets must be limited to a maximum of six

Pallets must be stacked in a strict vertical line

Gaps in stow must be adequately filled to prevent shifting.

7.12 Vessel Dispatch Standards

Lashing Cargo: Palletised Coils (ETTS): Hopper Type Holds

All coils should be placed eye to the sky (ETTS)

Lashing of palletised coils in Hopper type vessels should be lashed as shown on the diagram

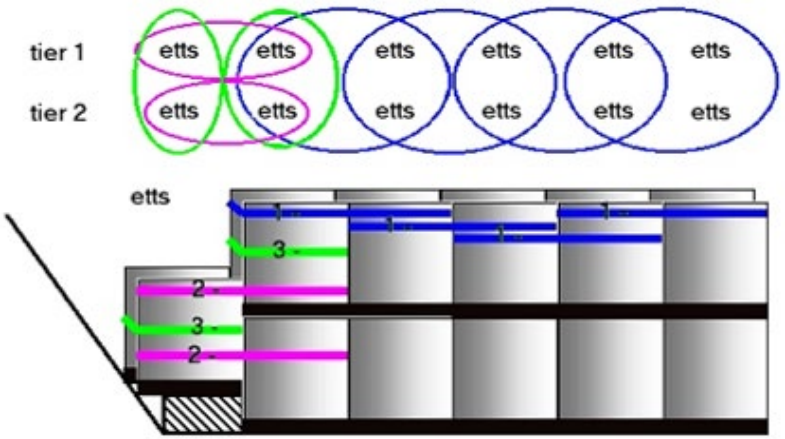

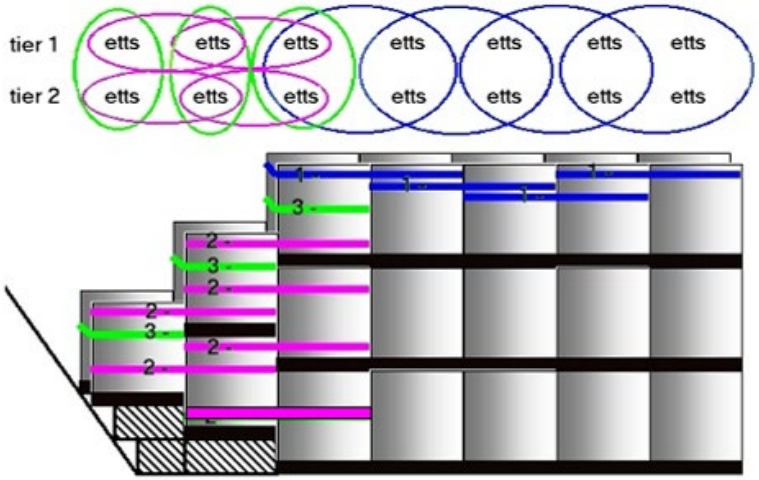

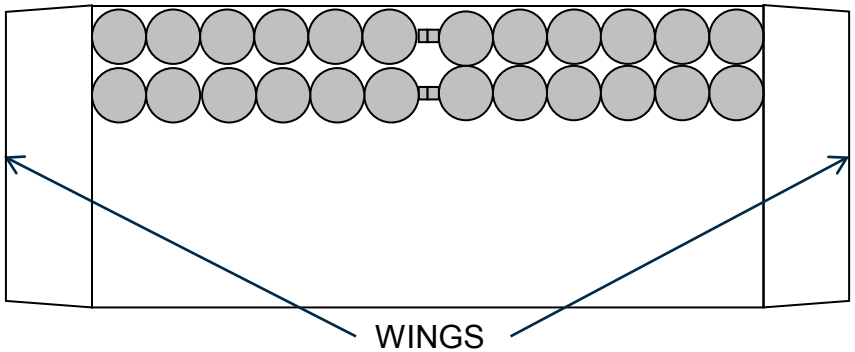

7.13 Vessel Dispatch Standards

Lashing Cargo: Palletised Coils (ETTS): Box Type Holds

Lashing of palletised coils in Box type vessels should be lashed as shown on the diagram

For any further guidance or support, please contact your Tata Steel quality contact

Small groups of ETTS should only be stowed against coil rows if dunnage is placed in-between the products

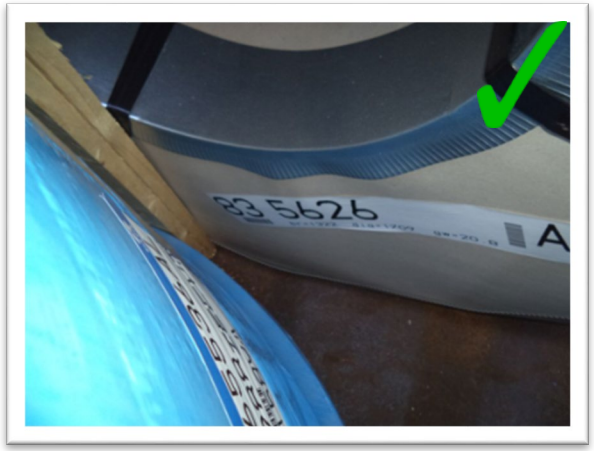

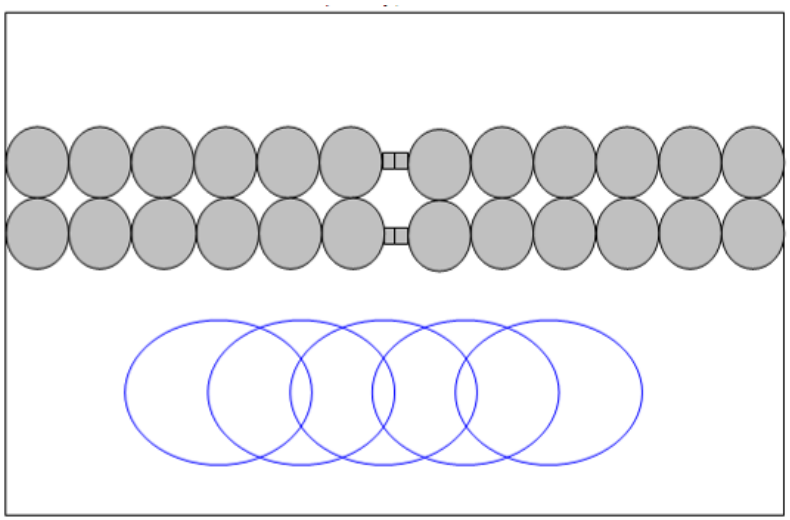

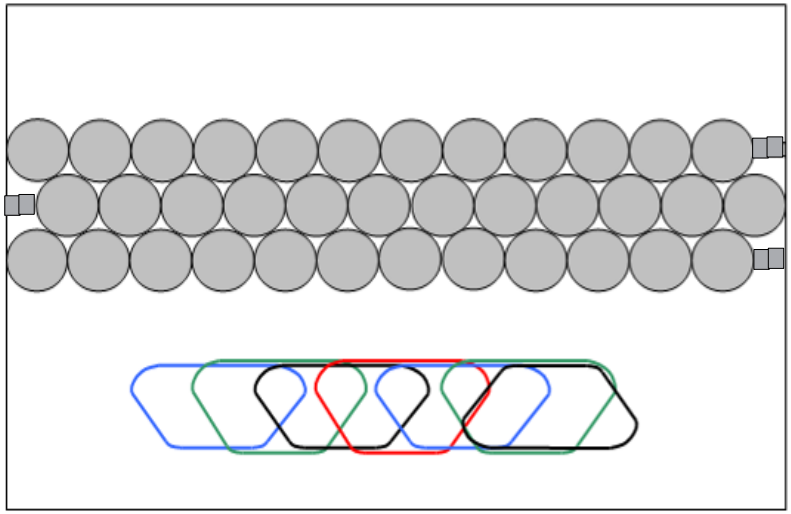

7.14 Vessel Dispatch Standards
Stowing Cargo: Slab

Tiers must be tommed (timbered) and secured with dunnage

Dunnage must be in a vertical line though the stack and 500 mm (20 inches) from the end of the slab

Dunnage must be 100 mm x 100 mm x 500 mm (3.5 x 3.5 x 20 inches) and made of hardwood.

The top surface of any stow (including broken stow) and loose tiers must be secured to Ships Master's satisfaction

Material must not be in contact with the ship's sides

Subsequent tiers should employ the pyramid effect to minimise dunnage used

Develop a level surface by timbering

Place timbers between material to leave a minimum of 100mm (4 inch) gap for discharge

There should be three lines of dunnage between slabs

There should be six lines of dunnage between the tank top and first slab

APPENDICES:

APPENDIX A: - TATA STEEL CARGO DAMAGE REPORT
APPENDIX B: - REPAIR–REPORT–RELEASE (3R) PROCESS
- REPAIR–REPORT–BLOCK (2RB) PROCESS

Appendix A: Tata Steel Cargo Damage Report

DAMAGED CARGO REPORT

Shipname	
Date of Discharging	
Loading Port	
Discharging Port	
Total Cargo	MT
Coils damaged? Yes/No	
Ship. number / Transp. Number	

Coil Number	Customer	Side wrappers - 1	Outer wrapper - 2	Coils with tape	Inner bore - 3	Inner ring - 4	Outer ring - 5	Missing straps (circum.) - 6	Missing straps (radial) - 7	Other damage	Material damaged? (Yes = Y, No = Leave Blank) (i)	Origin of damage OB or DD (ii) (iii)	BLOCKED	Photo No's

Appendix A: Tata Steel Cargo Damage Report

Coil number 78040401 - Description of damage

Appendix B: 3R / 2RB process

In case of packaging damage the packaging must be repaired immediately to prevent any further damage, reported to Tata Steel and released for any further shipment.

SP = Service Provider

LQSM =

CTS = Customer Technical Services

CSR = Customer Service Representative

QTS = Quality and Transport Safety

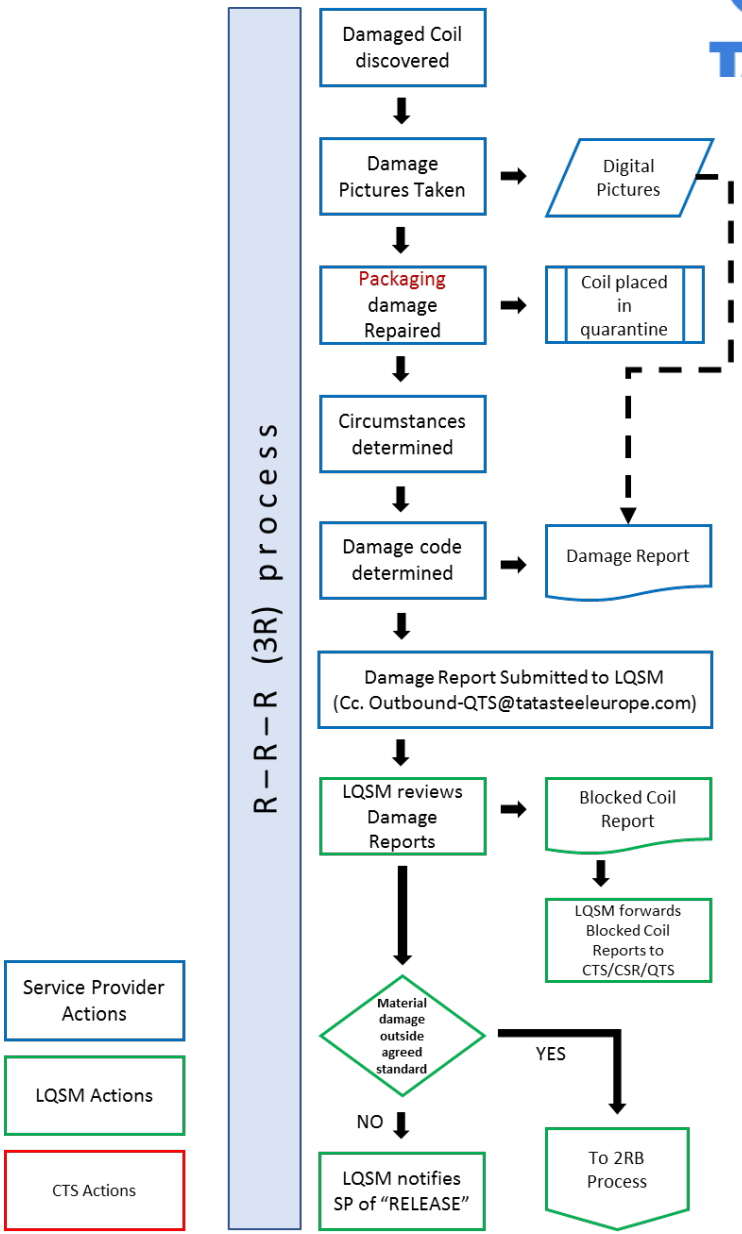

Appendix B: 3R / 2RB process
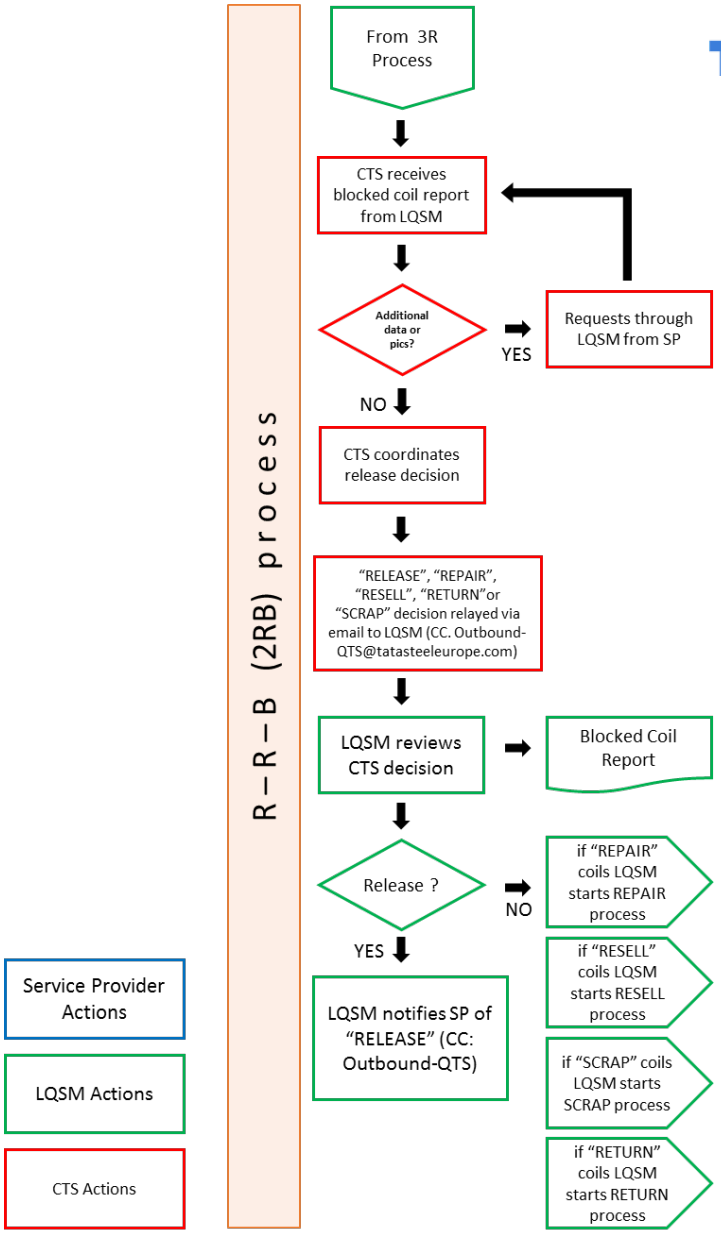
In case of material damage the packaging must be repaired immediately to prevent any further damage, reported to Tata Steel and quarantined (blocked). The damage has to be reported to your Tata Steel contact to be able to assess the damage and, if needed in cooperation with the customer, to decide what to do with the coil/damage.