# Tata Steel Technical Standard

## S1917301 Application of colours and safety colours

Author: Luke van der Meulen, PTC MCE HPM
Date: 29-7-2019
Version: 2.1

The latest version of this document is available from https://www.tatasteeleurope.com/ts/nl/gezondheid-en-veiligheid/toegang-en-veiligheid-ijmuiden/voorschriften

**Information and changes**

Document content: Luke.van-der-Meulen@tatasteeleurope.com +31 (0)251 493670
Standardisation: ptc-adm@tatasteeleurope.com +31 (0)251 494443

# Contents

# 1 Introduction

This standard describes the use of colours. The application of this standard will help to increase the visibility of safe and unsafe situations, situations where a mandatory requirement applies and the use of media.

The use of safety colours and safety signs is not a substitute for suitable working methods, instructions and precautions to prevent accidents.

The safety colours and safety signs described in this standard may differ from the safety colours and safety signs that are already used in a particular situation. The assessment of whether the safety colours and safety signs need to be replaced is based on the risk inventory and evaluation (RI&E) as set out in the Working Conditions Act (Arbeidsomstandighedenwet). If it turns out that the safety colours and safety signs used are not clear to the employees and any third parties present, this standard will assist in adjusting the safety colours and safety signs in the workplace. If the safety colours and safety signs used do not cause any problems in practice, their replacement can be postponed until the next renovation or (internal) relocation.

Given the importance of uniformity in the safety signals in a building, the signals provided by all the safety colours and safety signs in the entire building need to be based on the same safety system.

# 2 Scope

This standard discusses the use of colours for (safety) markings, media and structures. To ensure that that they do not lose their signalling function, safety colours should be used only where necessary.

This standard does not cover temporary workplace barriers and markings. For those, see QHSE 3.45.

This standard does not cover the exclusion zones for loading and unloading vehicles. For those, see QHSE 3.50.

# 3 Mandatory compliance

This standard is mandatory for all work performed for and at the Tata Steel IJmuiden site.

This standard may be deviated from if this is unavoidable. Before doing so, the Health, Safety & Environment (SPME.HSE) and PTC-HPM (SPME.PTC.MCE.HPM) departments should be consulted, after which Tata Steel, as the client, can give written permission for the deviation.

# 4 Colours

## 4.1 Colours

The colours used in this standard and their RAL codes are included in Table 4.1. The names of the specified basic colours are those laid down in the RAL colour standard.

**Table 4.1: Basic colours**

| Basic colour | RAL code |
|---|---|
| Signal yellow | 1003 |
| Golden yellow | 1004 |
| Oyster white | 1013 |
| Light ivory | 1015 |
| Bright red orange | 2008 |
| Signal red | 3001 |
| Red lilac | 4001 |
| Signal blue | 5005 |
| Brilliant blue | 5007 |
| Gentian blue | 5010 |
| Light blue | 5012 |
| Grass green | 6010 |
| Pale green | 6021 |
| Traffic green | 6024 |
| Signal green | 6032 |
| Light grey | 7035 |
| Platinum grey | 7036 |
| Dusty grey | 7037 |
| Agate grey | 7038 |
| Ochre brown | 8001 |
| Signal white | 9003 |
| Signal black | 9004 |
| Jet black | 9005 |
| White aluminium | 9006 |
| Pure white | 9010 |

## 4.2 Contrast colours

Contrast colours bring out the basic colour. The colours in this standard that are used together with a contrast colour are in included in Table 4.2.

**Table 4.2: Contrast colours**

| Colour | RAL colour | Contrast colour | RAL colour |
|---|---|---|---|
| Signal yellow | RAL 1003 | Signal black | RAL 9004 |
| Signal red | RAL 3001 | Signal white | RAL 9003 |
| Signal blue | RAL 5005 | Signal white | RAL 9003 |
| Signal green | RAL 6032 | Signal white | RAL 9003 |
| Signal white | RAL 9003 | Signal black | RAL 9004 |
| Signal black | RAL 9004 | Signal white | RAL 9003 |

## 4.3 Verification of colours

The verification of colours must be done with a certified RAL colour chart.

# 5 Application of colours

## 5.1 Hazards

The colour signal yellow **(RAL 1003)** must be used as the basic colour for the following:

- Moving parts posing a pinch, crush or collision hazard;
- Exterior of cranes, crane trolleys and crane cabins;
- Hoisting equipment;
- 2.1 Fencing, railings and raised edges of platforms that are not part of an escape route; see section 5.4;
- Obstacles posing a collision hazard must be marked out up to a height of 1000 mm, as shown in Figure 5-1;
- 2.1 Bottom and top steps of steel staircases, see Figure 5.6 and standard document A33910 page 01.

**Table 5.1 Application of signal yellow**

| Application of safety colours | Example | Basic colour | RAL code |
|---|---|---|---|
| Safety marking to mark out hazardous sites / moving installation parts. Can be painted on an entire surface or as a trim. |  | Diagonal black with signal yellow striping. | 1003<br>9004 |
| Fences to screen off the green pedestrian route and to protect operating areas<br>Hoisting equipment<br>Obstacles<br>Bottom and top steps of steel staircases | | Signal yellow | 1003 |

2.1

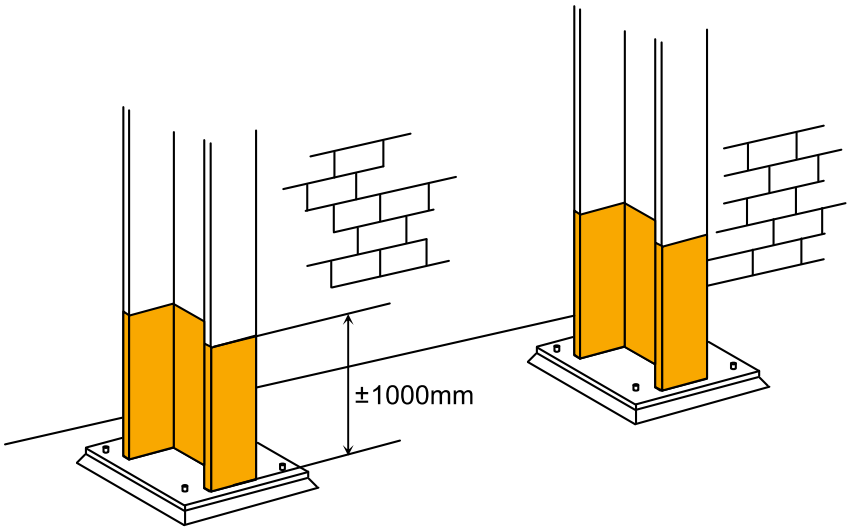


**Figure 5-1: Obstacles posing a collision hazard**

– Automatically closing doors must be painted with a colour band, as shown in Figure 5-2.

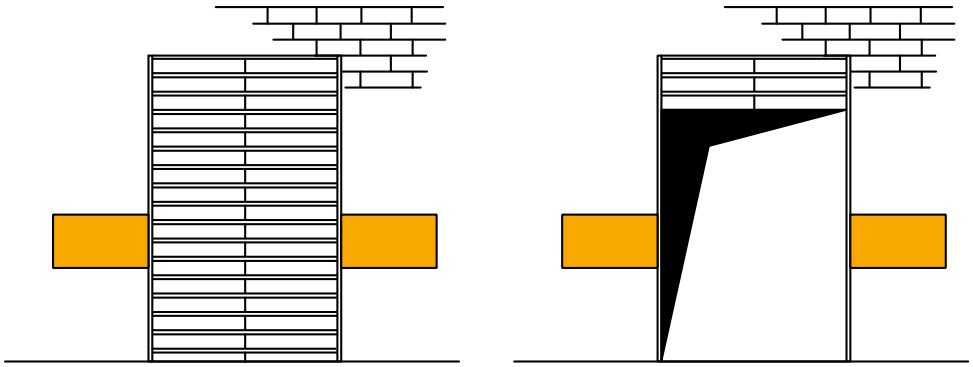

**Figure 5-2: Automatically closing doors with colour band**

**Figure 5-3: example of automatic roller door with colour band**

For areas and structures where extra attention is required, striping with the basic colour and the contrast colour must be applied at an angle of 45 degrees. The bands of the basic colour and those of the contrast colour must have the same width, see Figure 5-4.

**Figure 5-4: Striping for hazardous situations**

The following areas and structures must be marked out with striping:
– Lowered ceilings;
– Height differences in pedestrian routes, see Figure 5.5;
– Projecting corners or edges;
– Areas for the storage of hazardous substances and materials.

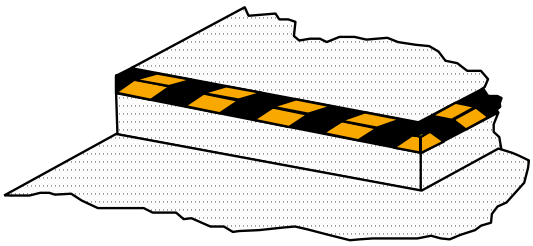

**Figure 5-5: Marking out height difference**

2.1

**Figure 5-6: Top and bottom steps in yellow**

## 5.2 Prohibition, fire-fighting equipment and emergency stop

The colour signal red (**RAL 3001)** must be used as the basic colour for the following:

- Fire-fighting equipment
- Emergency stop devices
- Temporary barrier in combination with white, see Table 5.2
- Areas where no objects may be placed

**Table 5.2 Application of signal red**

| Application of safety colours | Example | Basic colour | RAL code |
|---|---|---|---|
| Safety marking for prohibition, e.g. temporary barrier |  | Signal red<br>signal white | 3001<br>9003 |
| Areas where no objects may be placed, e.g. accessibility of hose reels. |  | Signal yellow trim<br>Centre in signal red | 1003<br>3001 |

For areas and structures where extra attention is required, striping with the basic colour and the contrast colour must be applied at an angle of 45 degrees. The bands of the basic colour and those of the contrast colour must have the same width, see Figure 5-7.

**Figure 5-7: Striping for situations where a prohibition applies, fire-fighting equipment and emergency stop devices**

The following areas and structures must be marked out with striping:

- Fencing that cordons off an area with restricted access;
- Sign stating location of fire-fighting equipment / Fire-fighting equipment storage facility.

## 5.3 Mandatory requirement

The colour signal blue **(RAL 5005)** must be used as the basic colour for the following:

- Marking to signal mandatory use of PPE;
- Instruction signs;
- Marking out area where mandatory requirements apply.

**Table 5.3 Application of signal blue**

| Application of safety colours | Example | Basic colour | RAL code |
|---|---|---|---|
| Work areas only accessible to authorised personnel (TSPP) |  | Blue / Mark out with a yellow/black trim (at least 10 cm) | 5005<br>1003<br>9004 |

To screen off or mark out areas or structures where a mandatory requirement applies, striping with the basic colour and the contrast colour must be applied at an angle of 45 degrees. The bands of the basic colour and those of the contrast colour must have the same width, see Figure 5-8.

**Figure 5-8: Striping for situations where mandatory requirement applies**

2.1

## 5.4 Pedestrian routes, escape and rescue equipment

The colour signal green (**RAL 6032)** must be used as the basic colour for the following:

- Pedestrian routes;
- Marking out escape hatch, escape gate, escape ladder or other escape route facilities;
- Marking out rescue equipment.

**Table 5.3 Application of signal green**

| Application of safety colours | Example | Basic colour | RAL code |
|---|---|---|---|
| Pedestrian route in the plant where **no PPE is required**, for example an route to offices or the canteen. | 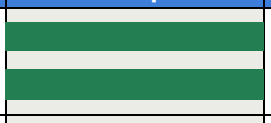 | Signal green<br>signal white | 6032<br>9003 |
| Pedestrian routes in the plant where **the indicated PPE is required**. |  | Signal green<br>signal white | 6032<br>9003 |
| High-risk pedestrian crossing<br>**Pedestrians must wait for a safe pass.** |  | Signal yellow<br>signal black<br>signal white | 1003<br>9004<br>9003 |

**Figure 5-9: Pedestrian route where no PPE is required**

**<u>On pedestrian routes where PPE is mandatory,</u>** the pedestrian route is marked out by the contrasting colour on both sides, as shown in Figure 5-10.

**Figure 5-10: Pedestrian route where PPE is mandatory**

**Figure 5-11: High-risk pedestrian crossing**

High-risk pedestrian crossings must be marked out with striping, with the contrast colour running at a right angle to the basic colour.

The triangular markings indicate that **pedestrians must give right of way.** The bands of the basic colour and those of the contrast colour must have the same width, as shown in Figure 5-12.

**Figure 5-12: High-risk pedestrian crossing where PPE is mandatory**

To screen off or mark out a safe area, striping with the basic colour and the contrast colour must be applied at an angle of 45 degrees. The bands of the basic colour and those of the contrast colour must have the same width, see Figure 5.13

**Figure 5.13: Striping for a safe situations**

## 5.5 Colours on safety markings

A location where people may have a safety risk, the risk must be indicated by safety signs, as described in NEN EN ISO 7010 and the supplementary Dutch standard NEN 3011 and the Dutch occupational health and safety legislation. Here is a quick overview of the possible signs:

**Table 5.4 Colour and design of safety markings**

| Colour, design and examples | | | |
|---|---|---|---|
| | 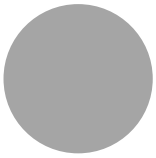 |  |  |
| RAL 3001<br><br>Prohibition or fire-fighting equipment |  | |  |
| RAL 1003<br><br>Warning | |  |  |
| RAL 6032<br><br>Evacuation equipment, safety equipment | | |  |
| RAL 5005<br><br>Mandatory requirement, guidance or instruction |  | |  |

## 5.6 Media

Medium carriers, such as piping, tanks and pressure vessels, must be painted with a colour and marking to make clear which medium they contain. In addition to the medium colour specified in Table 5.5, the medium carrier must be marked in accordance with Tata Steel Standard S1768101.

### 5.6.1 Medium colours

The mandatory medium colours are included in Table 5.5. Medium markings are used to distinguish between the various media used in a group.

**Table 5.5: Medium colours**

2.1

| Medium | Example | Basic colour | RAL code |
|---|---|---|---|
| Water | | Grass green | 6010 |
| Steam | | White aluminium | 9006 |
| Air | | Light blue | 5012 |
| Gas | | Golden yellow | 1004 |
| Bases (pH > 8) | | Red lilac | 4001 |
| Acids (pH < 6) | | Bright red orange | 2008 |
| Other media* | | Jet black | 9005 |
| Oxygen | | Gentian blue | 5010 |
| Oils, liquid fuels | | Ochre brown | 8001 |
| Fire-fighting equipment | | Flame red | 3000 |

* this also includes condensate medium containers

### 5.6.2 Piping

When preservative paint is applied to a pipe, the colour of the top paint layer will be determined in accordance with Table 5.5. For fibre glass reinforced, plastic and stainless steel piping that is not preserved with an painting, it is sufficient to fit the medium labels in accordance with S1768101.

If piping which has to be preserved is visible from outside the gate and it has been agreed with the environment agency that the pipe does not have be entirely painted in the medium colour, the pipe must be painted in the colour **platinum grey (RAL 7036)**. The medium marking labels must be applied in accordance with S1768101.

### 5.6.3 Reservoirs (above ground)

Reservoirs that are not isolated, such as storage tanks, process tanks, pressure vessels, drums, bunkers and basins, must be painted light grey (RAL 7035), with a colour band in the medium colour and with the medium name in the complementary colour. This limits the impact of weather factors, such as solar heat.


**Figure 5.14: Example of colour use**

The height of the medium colour band must be determined per situation, but must at least be 1.5 times the lettering height.

The lettering height to be used for the medium name depends on the point from which the reservoir can be safely approached and can be determined using the following rule of thumb: 20 metres reading distance of = 20 centimetres lettering height.

## 5.7 Optional infrastructure colours

When a machine or structure has been designed specifically for use on the Tata Steel IJmuiden site, the following colours can be selected.

**Table 5.6: Optional colours for structures**

| Application of colours for installations and structures (PTC standard) | Example | Basic colour | RAL code |
|---|---|---|---|
| General colour for structural parts, such as: Exterior of operating areas, hall walls and roofing, pressure vessels, door frames and steel structures | | Light grey | 7035 |
| | | Platinum grey | 7036 |
| | | Dusty grey | 7037 |
| Structural parts that define the visual impact: entrance doors, hall walls, electric motors | | Brilliant blue | 5007 |
| Tools, machinery (lathes, shears) | | Pale green | 6021 |
| Installation parts (roller equipment, machine frames, cooling benches) | | Traffic green | 6024 |

**Table 5.7: Optional interior colours**

| Application of interior colours (PTC standard) | Example | Basic colour | RAL code |
|---|---|---|---|
| Interior of crane cabins | | Light grey | 7035 |
| Interior of operating cabins, interior of halls, exterior of internal offices | | Oyster white | 1013 |
| Interior of operating cabins | | Light ivory | 1015 |
| Interior of technical rooms, electrical rooms and hydraulic rooms | | Pure white | 9010 |

**Table 5.8: Optional infrastructure colours**

| Application of infrastructure colours, multiple options available | Example | Basic colour | RAL code |
|---|---|---|---|
| Area designated for auxiliary equipment and industrial vehicles | | Signal yellow trim | 1003 |
| Parking space for firms | P | Sky blue trim | 5005 |
| Alternative parking space for firms | P | Traffic red trim | 3020 / 5005 |
| No parking; space reserved for removing bins, etc. | N.P. N.P. N.P. N.P. | White trim and diagonals with width of 15 cm | 9010<br>7035 |

# 6 Application by means of preservative paint

When (safety) colours are applied by means of preservative paint, this application and the pretreatment of the subsurface must be carried out in accordance with Tata Steel Standard S3105601.

# 7 Changes in content

## 7.1 Version 2.0

**Table 7.1: Colour code changes**

| Change | Colours Standard Version 1.1 (1996) | Colours Standard Version 2.0 (2018) |
|---|---|---|
| **Revision** | | Comprehensive revision of previous version (version 1.1) |
| Safety signs | | In accordance with NEN EN ISO 7010 and NEN 3011 |
| Title | Application of safety colours | Application of colours and safety colours |
| Signal colour red | RAL 3000 flame red | RAL 3001 official signal colour red |
| Signal colour yellow | RAL 1018 zinc yellow | RAL 1003 official signal colour yellow |
| Signal colour green | RAL 6024 traffic green | RAL 6032 official signal colour green |
| Signal colour blue | RAL 5010 gentian blue | RAL 5005 official signal colour blue |
| | RAL 9017 traffic black | RAL 9004 signal black |
| Rail and road vehicles | Specification of the colour for rail vehicles | No specification of the colour for rail vehicles |

**Table 7.2: Colour code changes**

| Change | QHSE 3.30-1 Appendix Colours Standard | Colours Standard Version 2.0 (2018) |
|---|---|---|
| General colour for structural parts | Grey RAL 7035 (light grey) | Grey RAL 7035 (light grey) or Grey RAL 7037 (dusty grey) |
| General colour for pressure vessels and tanks | Grey RAL 7035 (light grey) | Grey RAL 7035 (light grey) / RAL 7036 (platinum grey) |
| Colour for other liquids | RAL 9017 (traffic black) | RAL 9005 (jet black) (NEN 3011) |
| Colour for fire-fighting equipment | RAL 3000 (flame red) | RAL 3001 (signal red) (NEN 3011) |
| Colour yellow | RAL 1018 (zinc yellow) | RAL 1003 (signal yellow) (NEN 3011) |

**Table 7.3: Change references**

| Change | Standard S3105601 Preserving and coating application | Colours Standard Version 2.0 (2018) |
|---|---|---|
| Specification of colours and preserving | Specification of colours in version 5.3. This Standard has already been replaced by a newer version. Because colours are no longer specified since version 6.0, reference is made to the Colours Standard. | For the application of colours by means of coating, reference is made to Standard S3105601. |

## 7.2 Version 2.1

Colour yellow for bottom and top steps of steel staircases

Textual changes in section 5.4

Table 5.5: pH value for water has been removed because it no longer applies.

Changes are indicated in the margin by means of a revision triangle: 2.1

# 8 References

## 8.1 European and Dutch standards

| | |
|---|---|
| NEN 3011 2015 | Safety colours and safety signs in workplaces and public areas; |
| NEN 3050 2002 | Identification colours for pipes conveying fluids in liquid or gaseous condition in land installations; |
| NEN-EN-ISO 7010 2012 | Graphical symbols – Safety colours and safety signs |

Working Conditions Decree (Arbeidsomstandighedenbesluit)
Occupational health and safety regulations

## 8.2 Tata Steel regulations

http://veiligheid.tatasteel.nl/en/home/

| | |
|---|---|
| QHSE 3.30 | Colours standard |
| QHSE 3.45 | Temporary workplace barriers |
| QHSE 3.50 | Exclusion zones |
| S1471201 | Media definitions |
| S1768101 | Marking medium containers |
| S3105601 | Corrosion control by means of preserving |